System Block Diagram

Sheet 1 of 63
System Block Diagram

PCB 9 IN1	6-7P-P5709-002	*
MAIN/B	6-71-P5700-D02	*
TOUCH SENSOR/B	6-71-P5701-D01	
CLICK/B	6-71-P5702-D01	*
USB/B	6-71-P5703-D02	*
POWER LED/B	6-71-P5704-D01	
KB/B	6-71-P5707-D01	*
AUDIO/B	6-71-P5708-D02	*
FINGER SENSOR/B	6-71-P570F-D01	*
SWITCH/B	6-71-P570S-D01	

P570WMMB-0D (K/B 3C)

P570WM Block Diagram

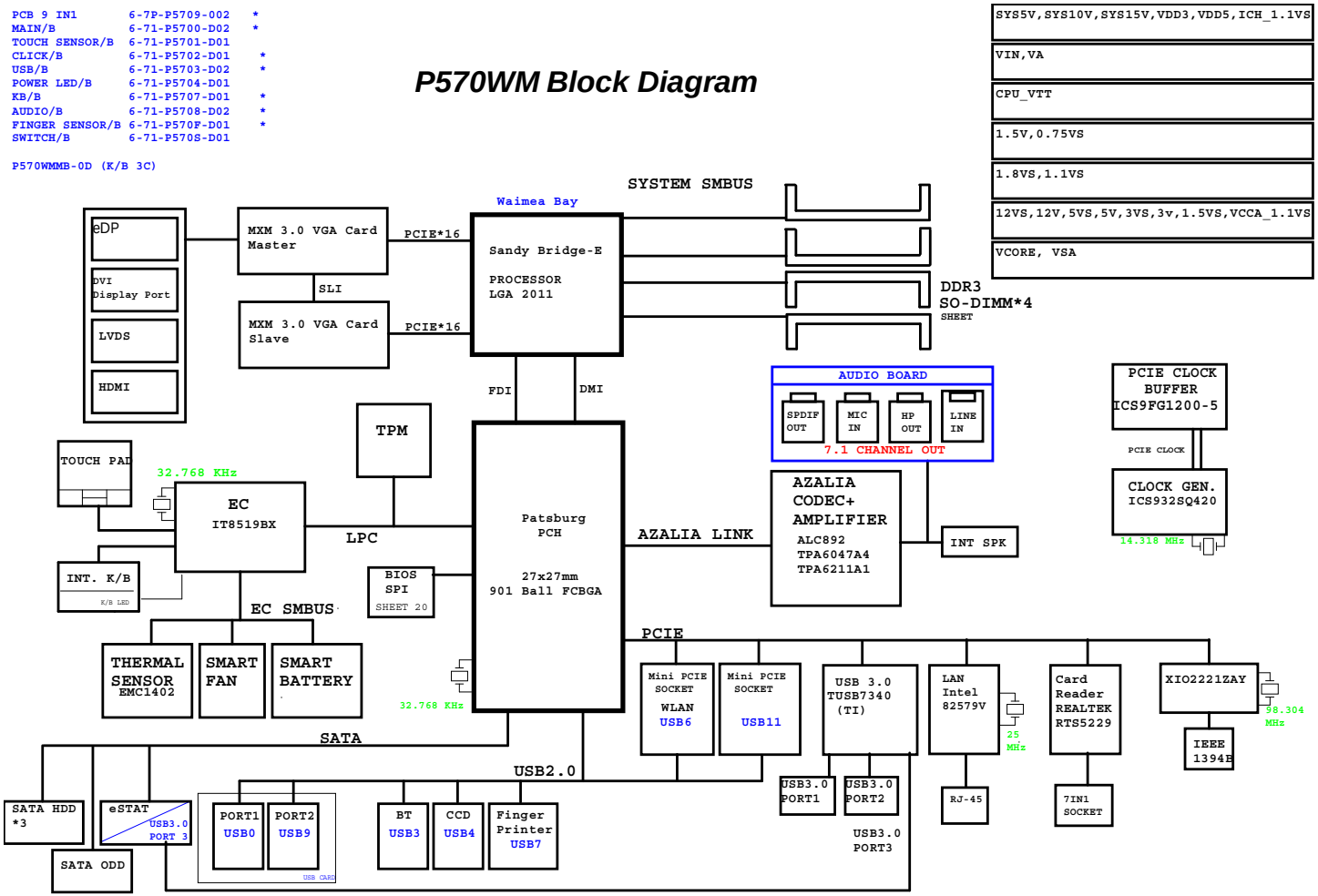

Sandy Bridge - DDR 0 & 1

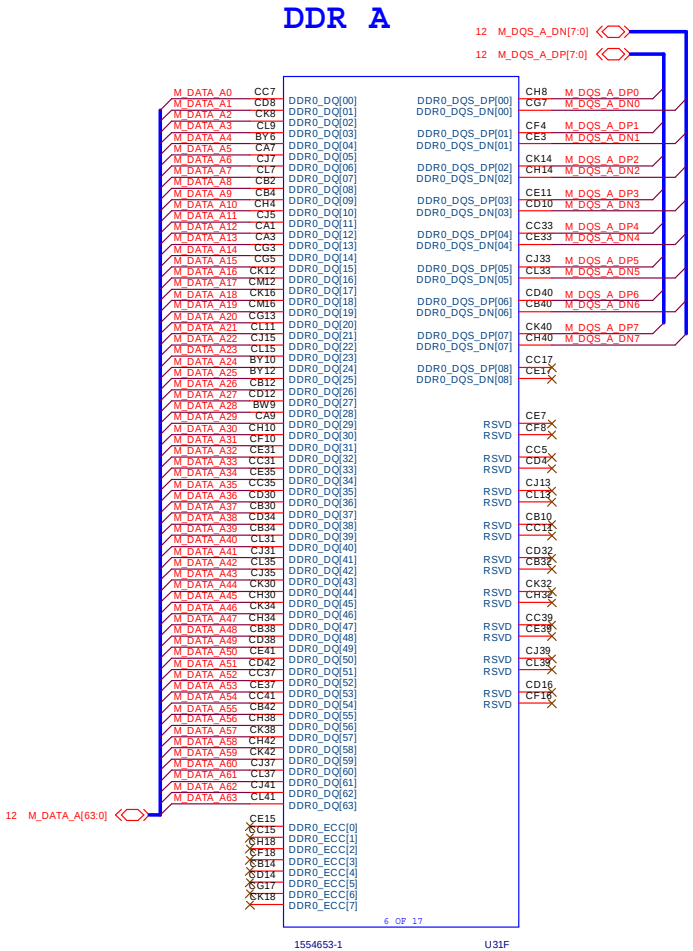

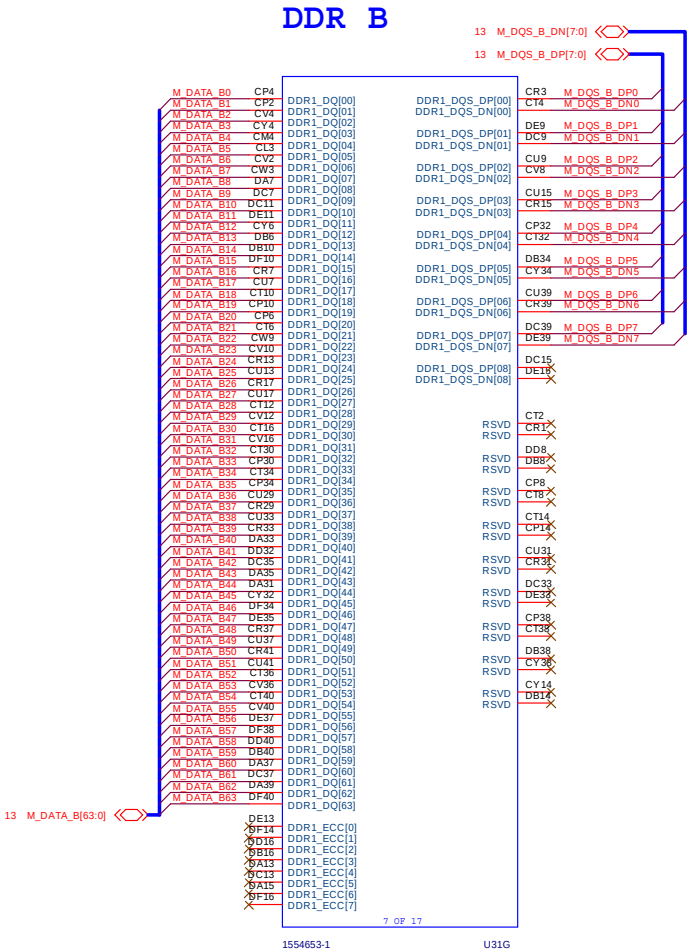

Sheet 2 of 63
Sandy Bridge - DDR 0 & 1

Sandy Bridge - DDR 2 & 3

Sheet 3 of 63
Sandy Bridge - DDR 2 & 3

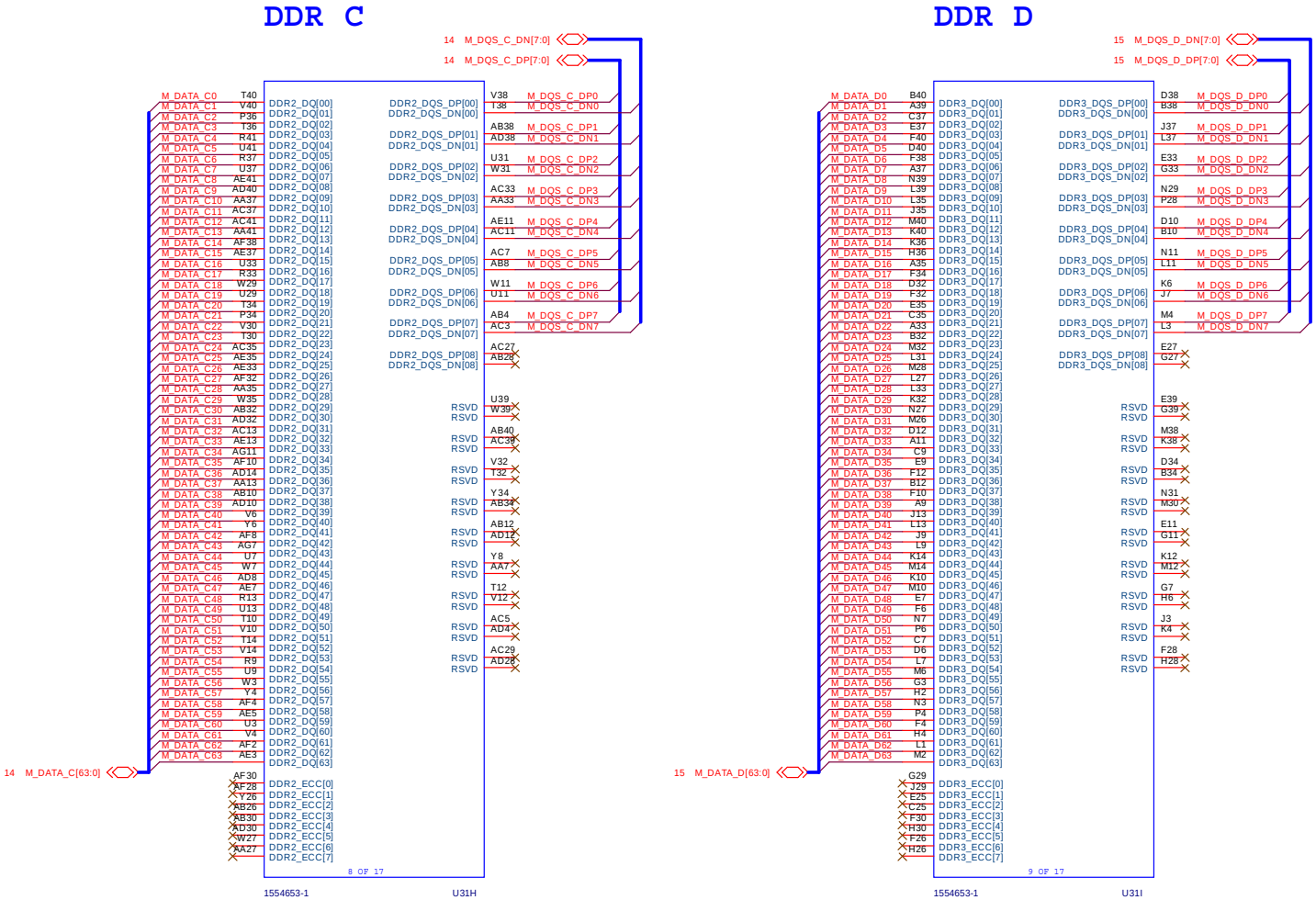

Sandy Bridge - DDR Control

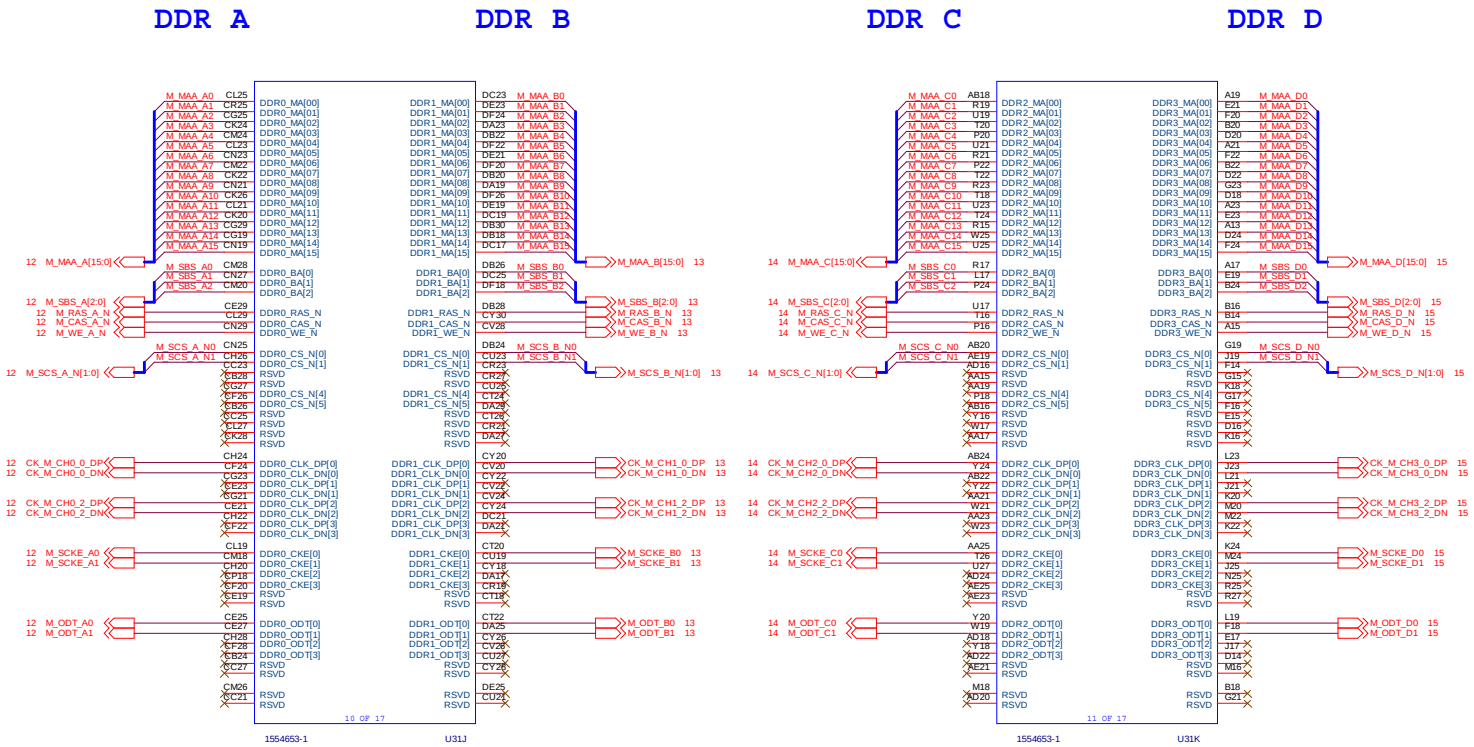

Sheet 4 of 63
Sandy Bridge - DDR Control

Sandy Bridge - Control

Sheet 5 of 63
Sandy Bridge - Control

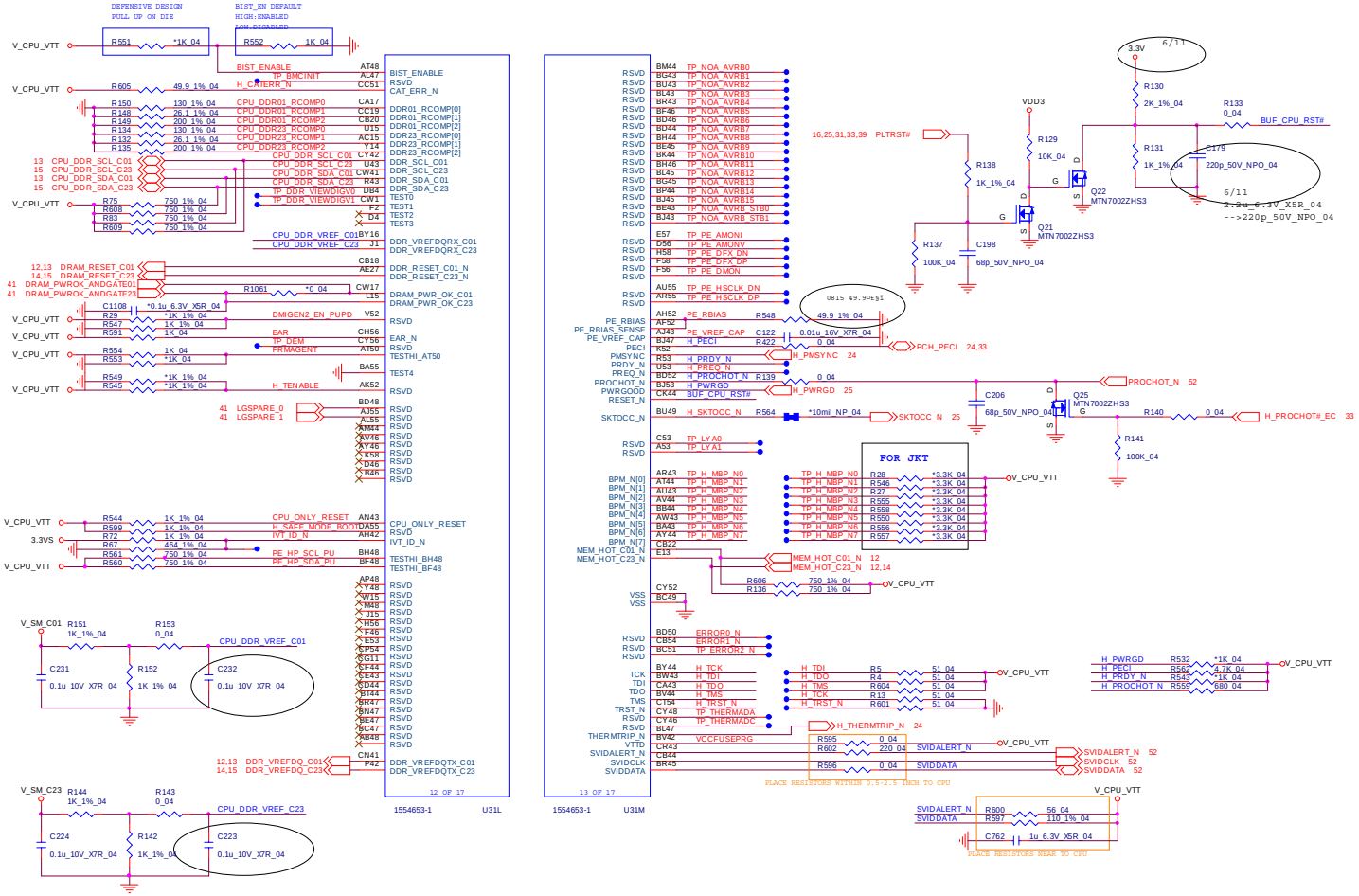

Sandy Bridge - PEG & DMI

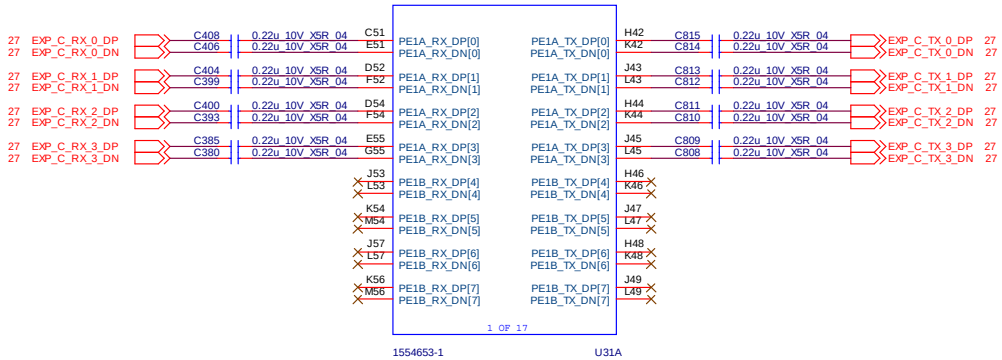

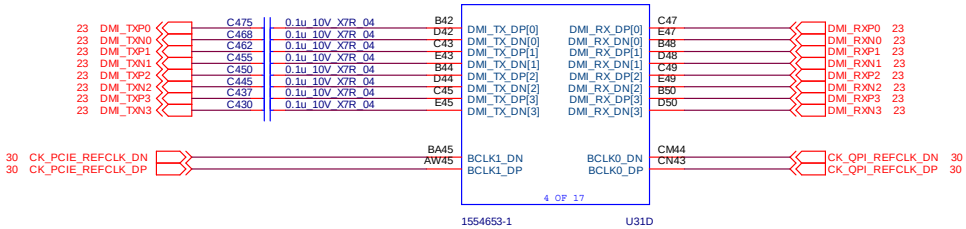

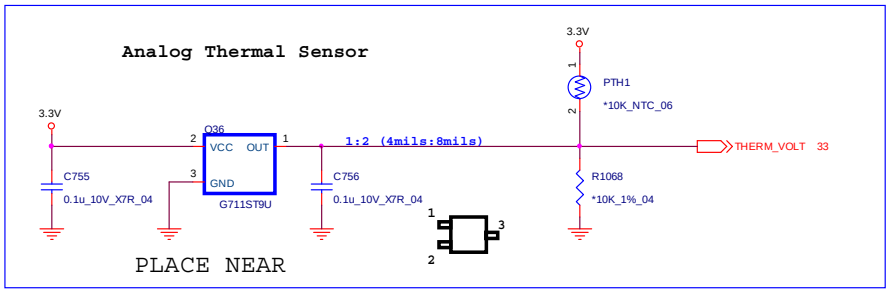

Sheet 6 of 63
Sandy Bridge - PEG & DMI

Sandy Bridge - PEG

Sheet 7 of 63
Sandy Bridge - PEG

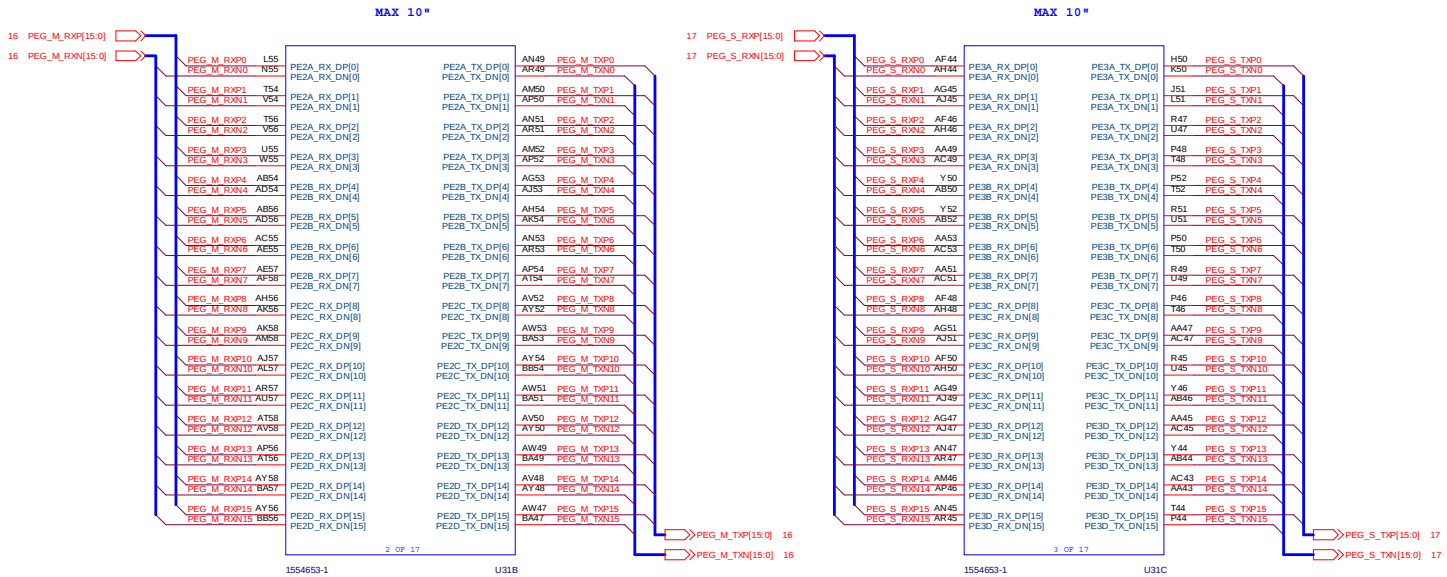

Sandy Bridge - N-Power

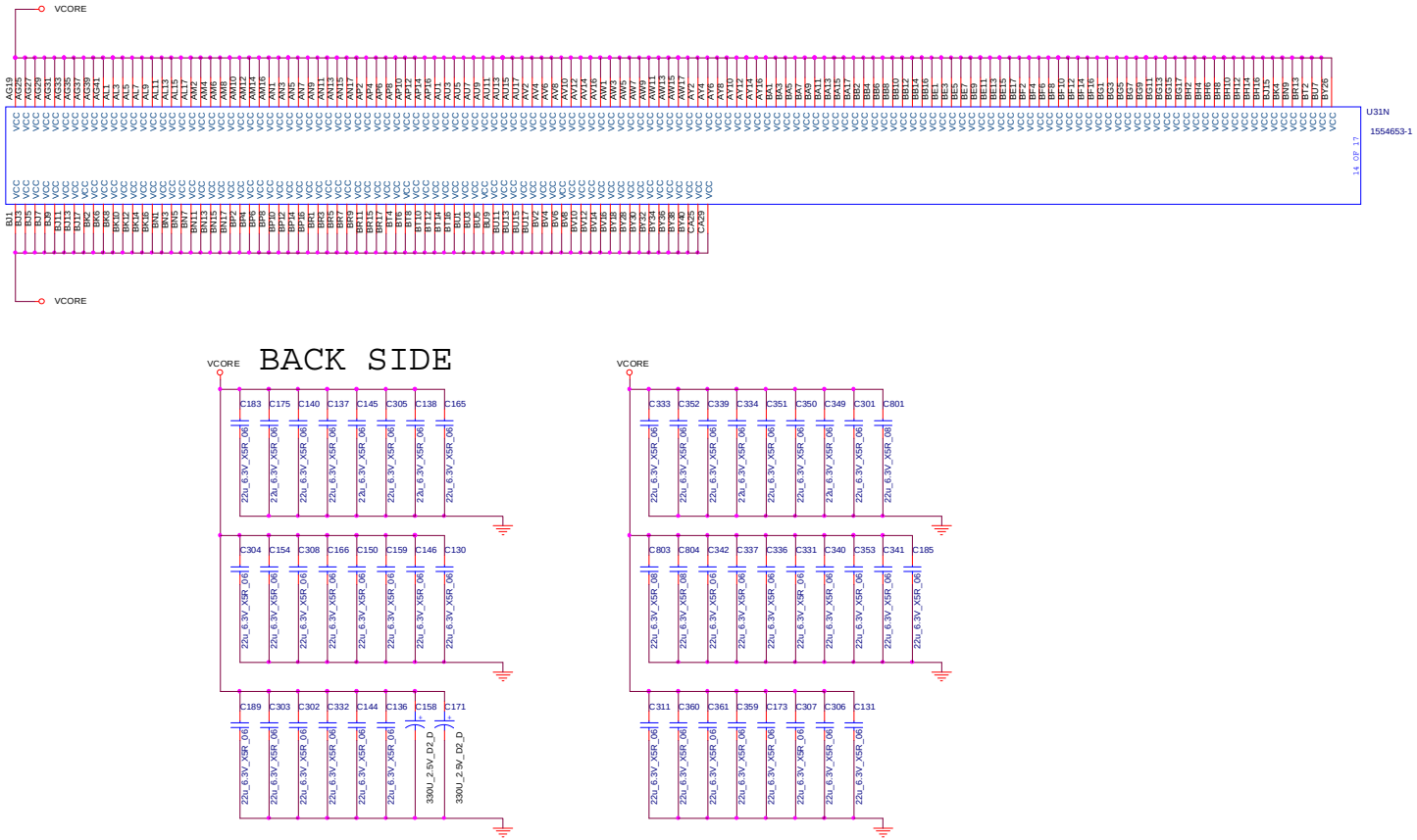

Sheet 8 of 63
Sandy Bridge - N-Power

Sandy Bridge - O-Power

Sheet 9 of 63
Sandy Bridge - O-Power

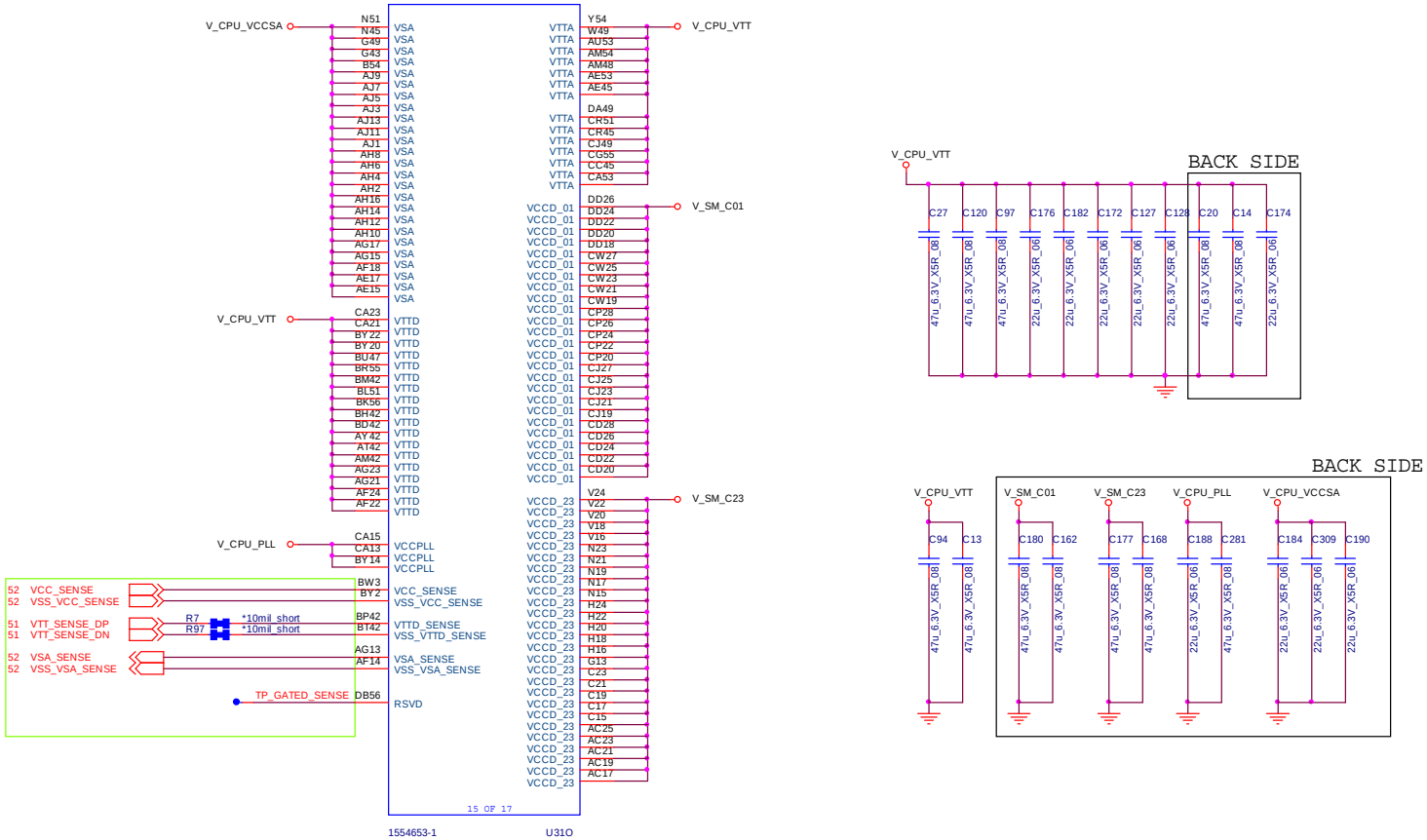

Sandy Bridge - VSS

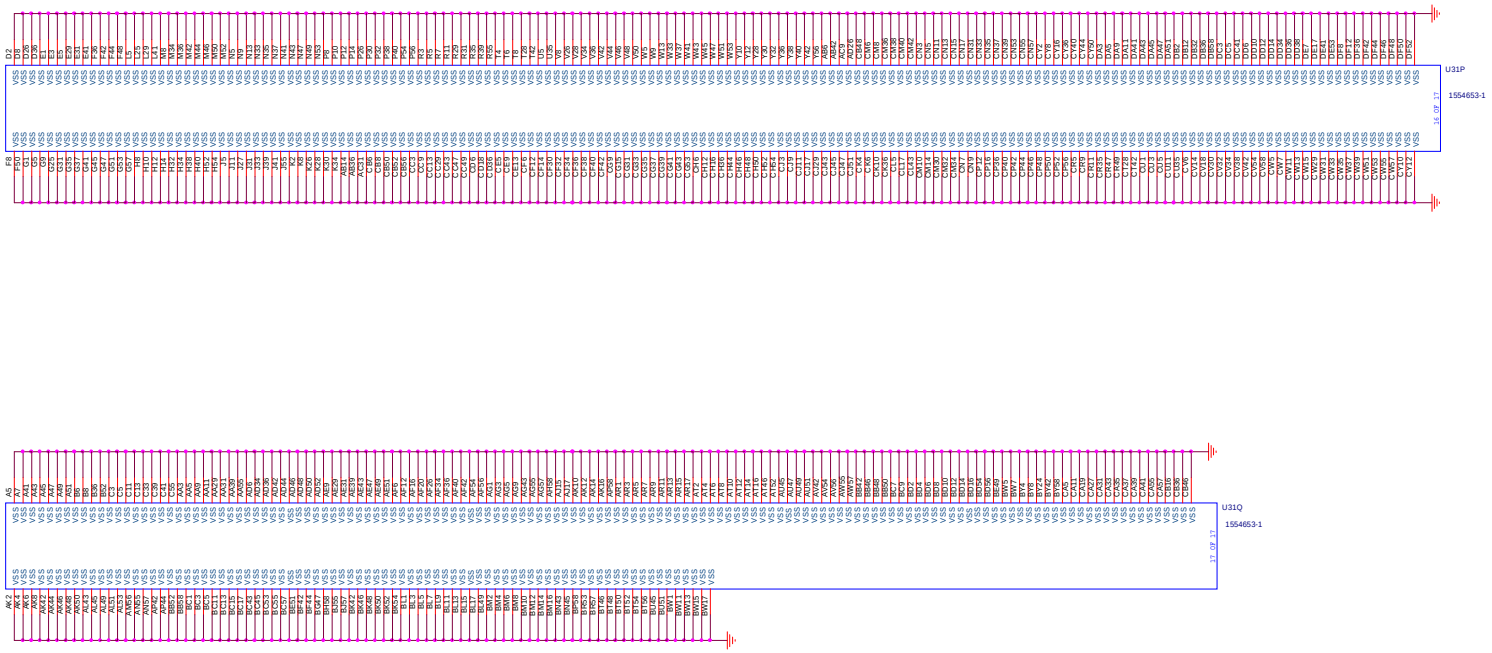

Sheet 10 of 63
Sandy Bridge - VSS

Sandy Bridge - QPI

Sheet 11 of 63
Sandy Bridge - QPI

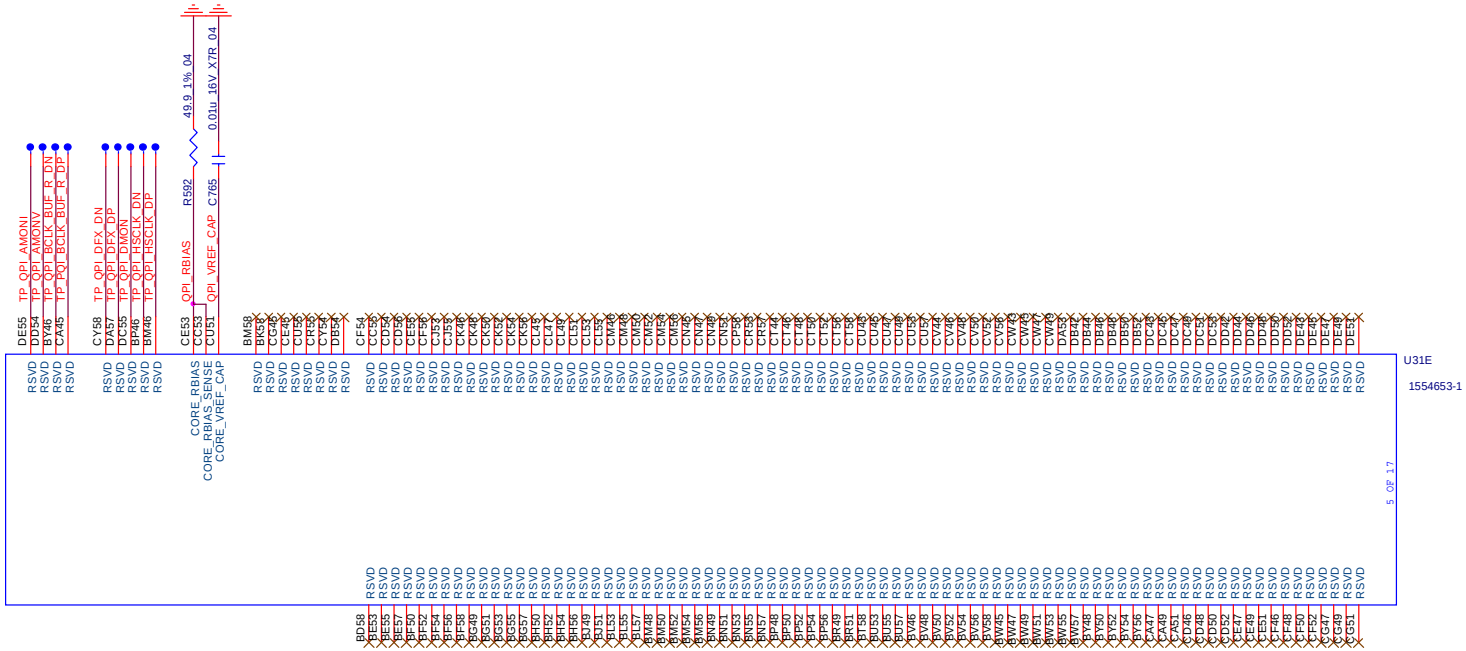

DDR3 CHA SO-DIMM 0

Channel A SO-DIMM 0

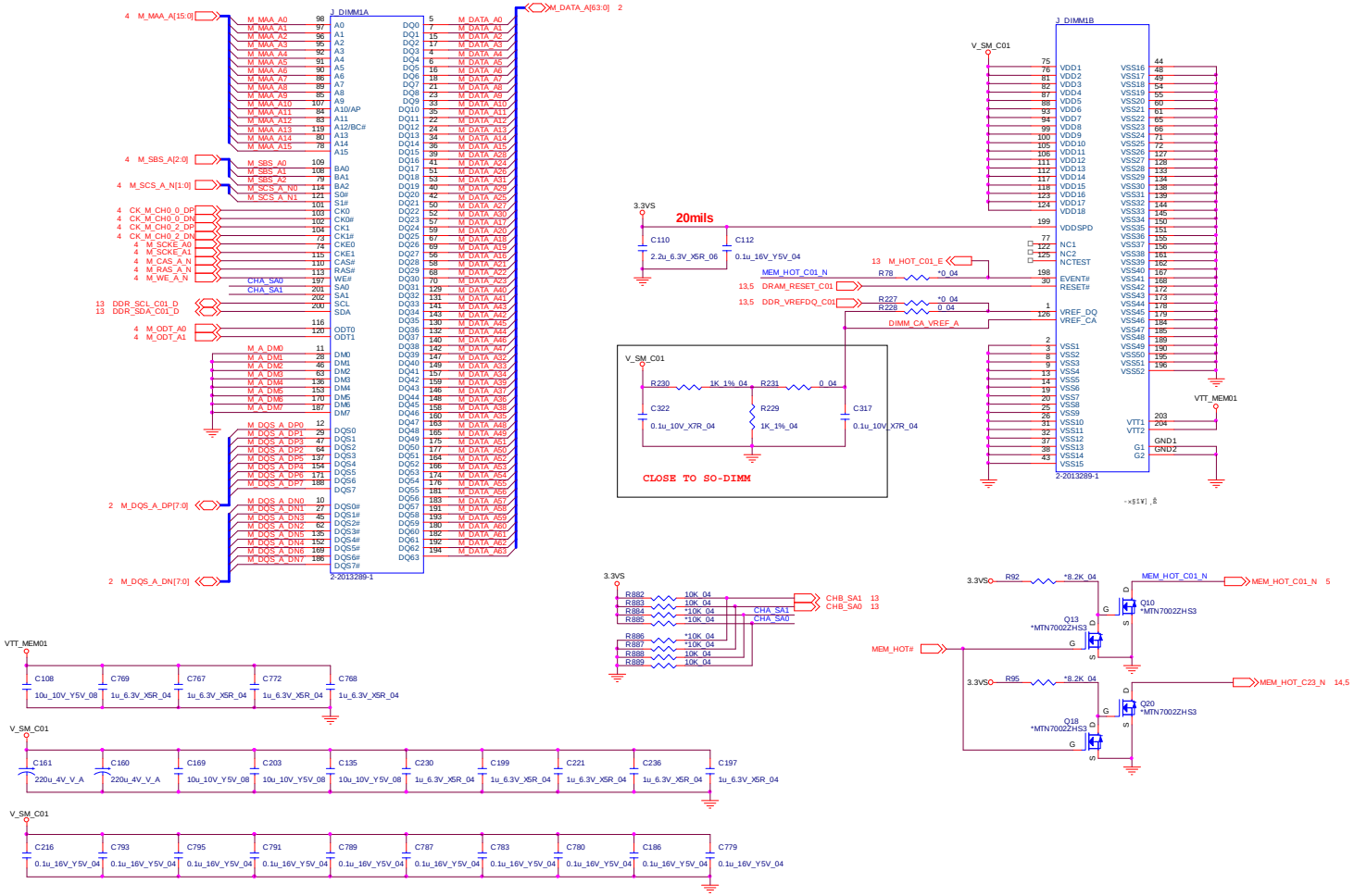

Sheet 12 of 63
DDR3 CHA
SO-DIMM 0

DDR3 CHB SO-DIMM 1

Channel B SO-DIMM 1

Sheet 13 of 63
DDR3 CHB
SO-DIMM 1

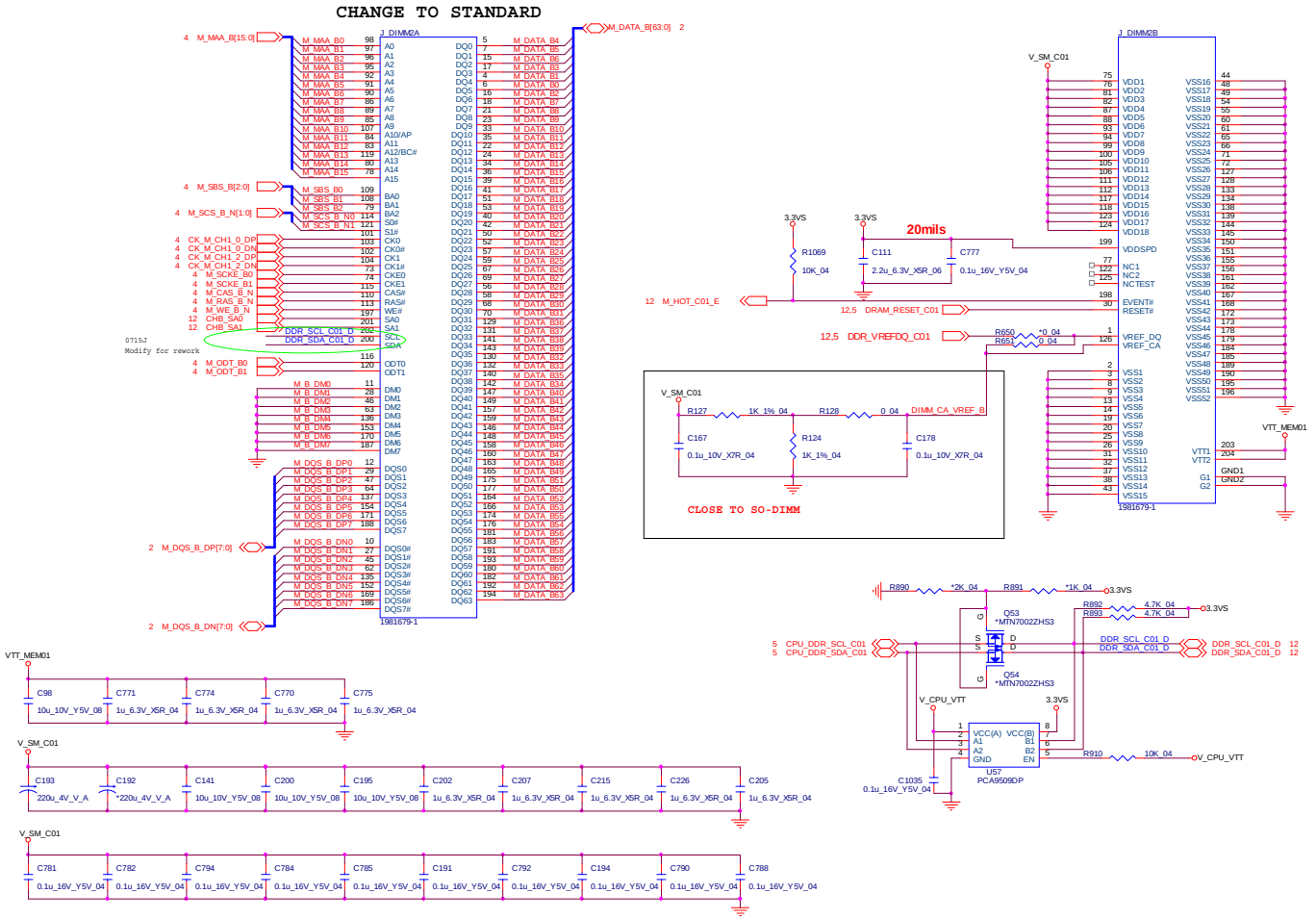

DDR3 CHC SO-DIMM 2

Channel C SO-DIMM 2

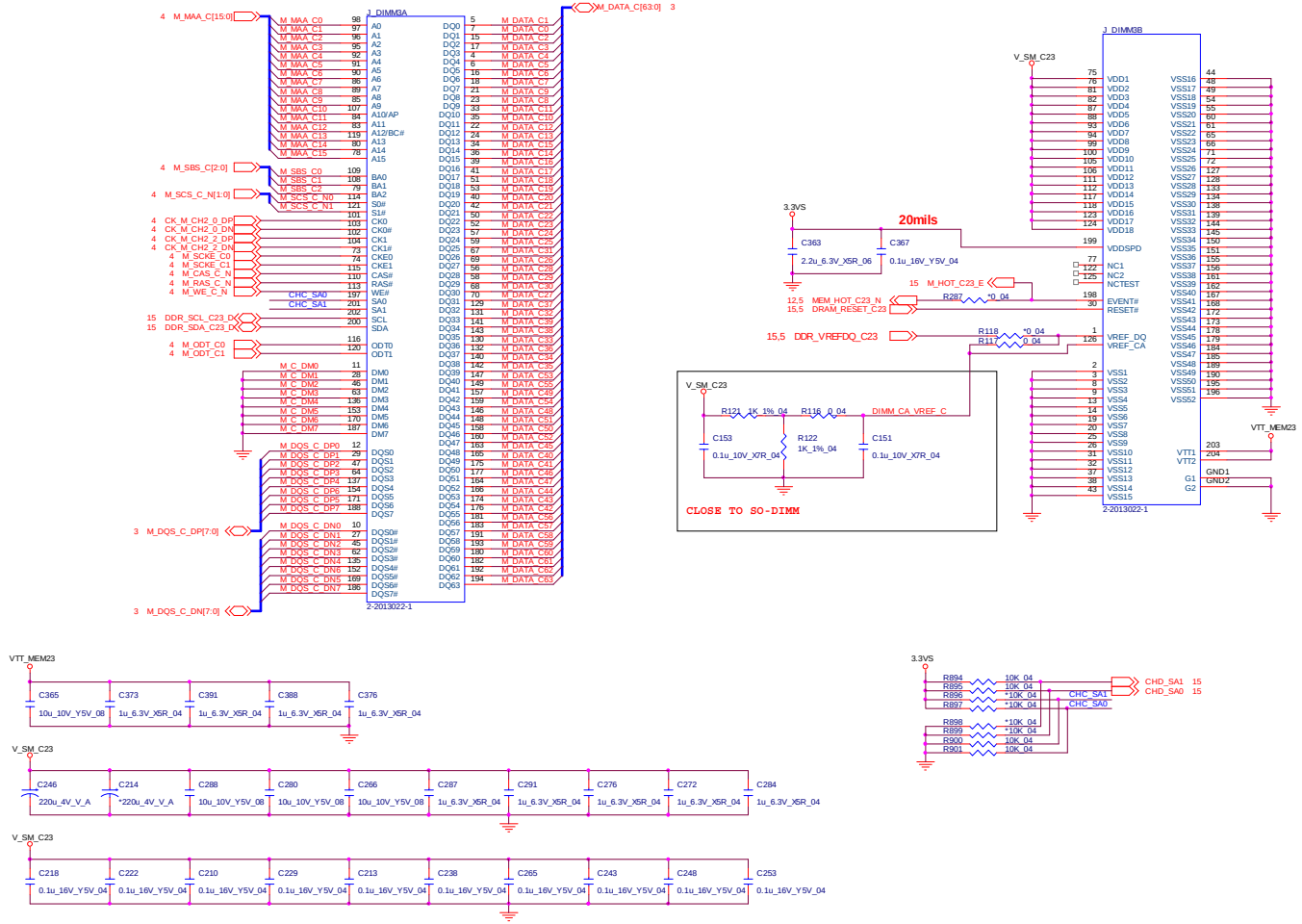

Sheet 14 of 63
DDR3 CHC
SO-DIMM 2

DDR3 CHD SO-DIMM 3

Channel D SO-DIMM 3

Sheet 15 of 63
PCH 1/8
DDR3 CHD
SO-DIMM 3

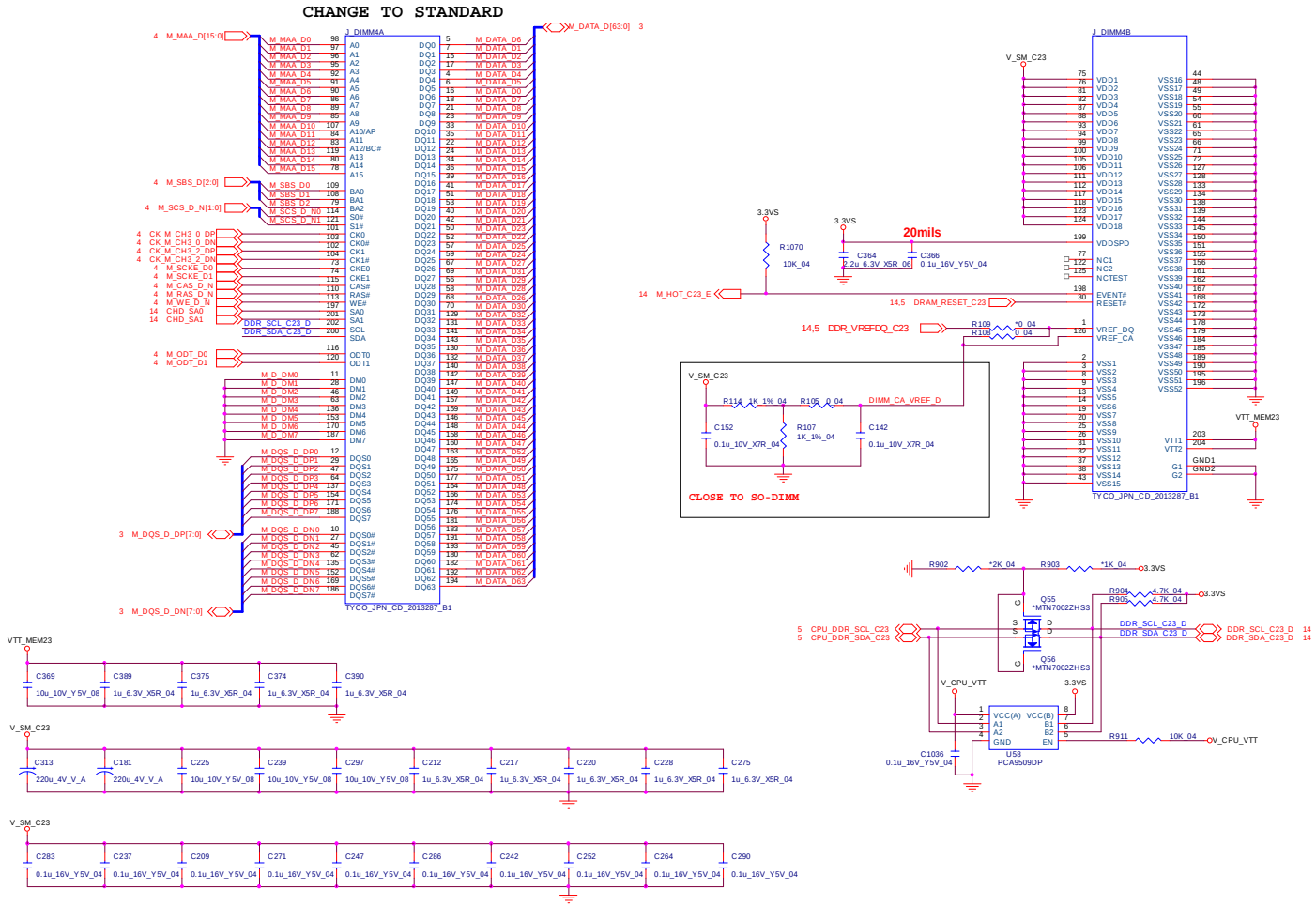

MXM 3.0 PCI-E MASTER

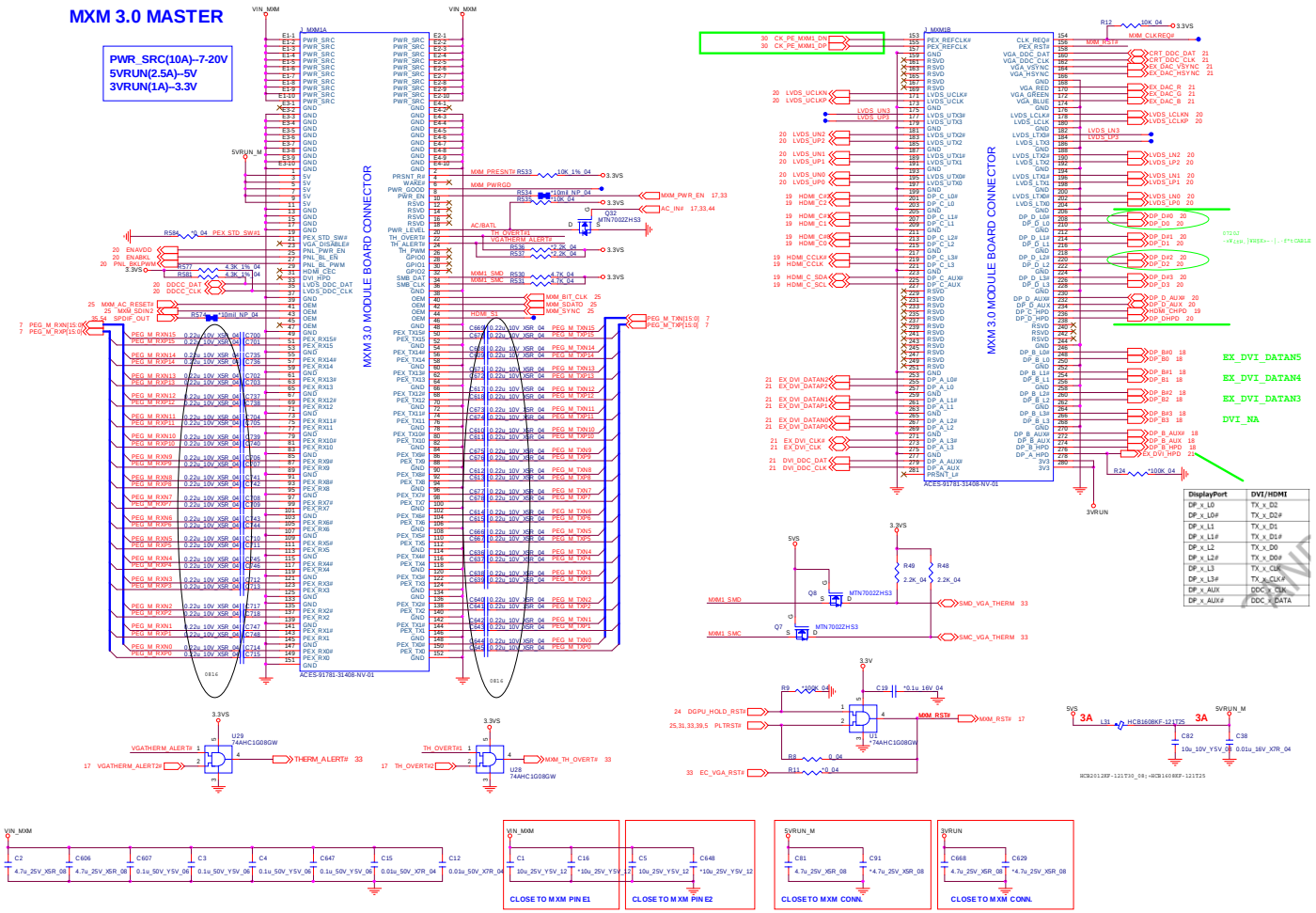

Sheet 16 of 63
MXM 3.0 PCI-E MASTER

MXM 3.0 PCI-E SLAVE

Sheet 17 of 63
MXM 3.0 PCI-E SLAVE

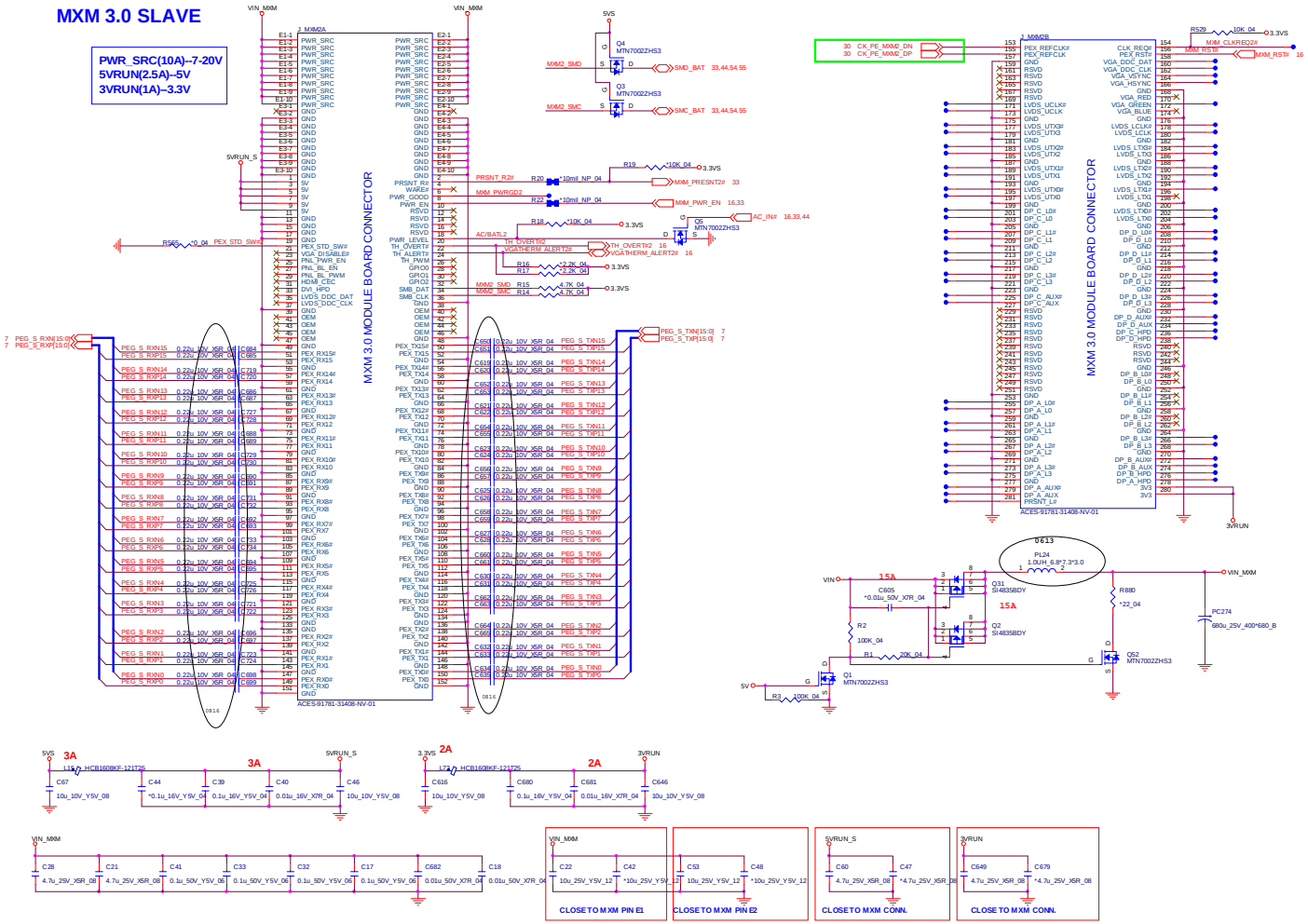

Display Port, New Card

NEW CARD (54)

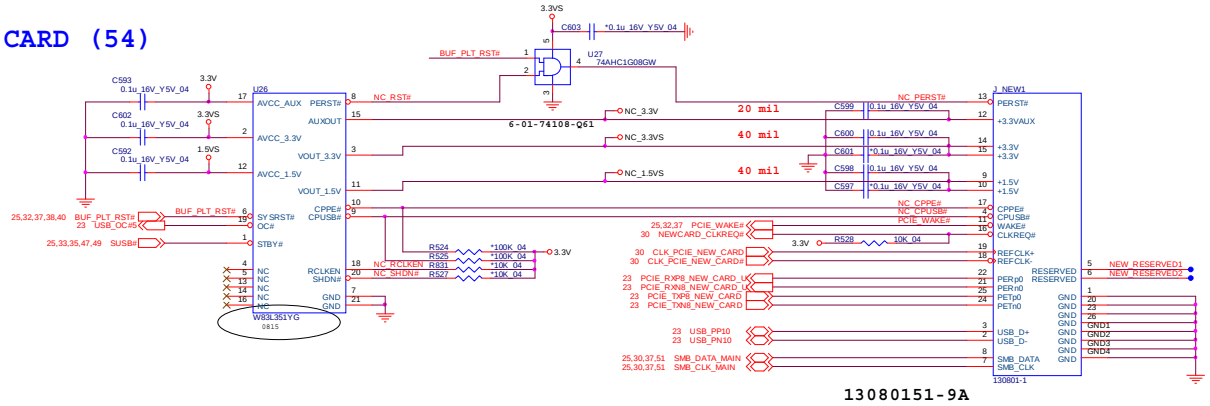

dGPU DISPLAY PORT

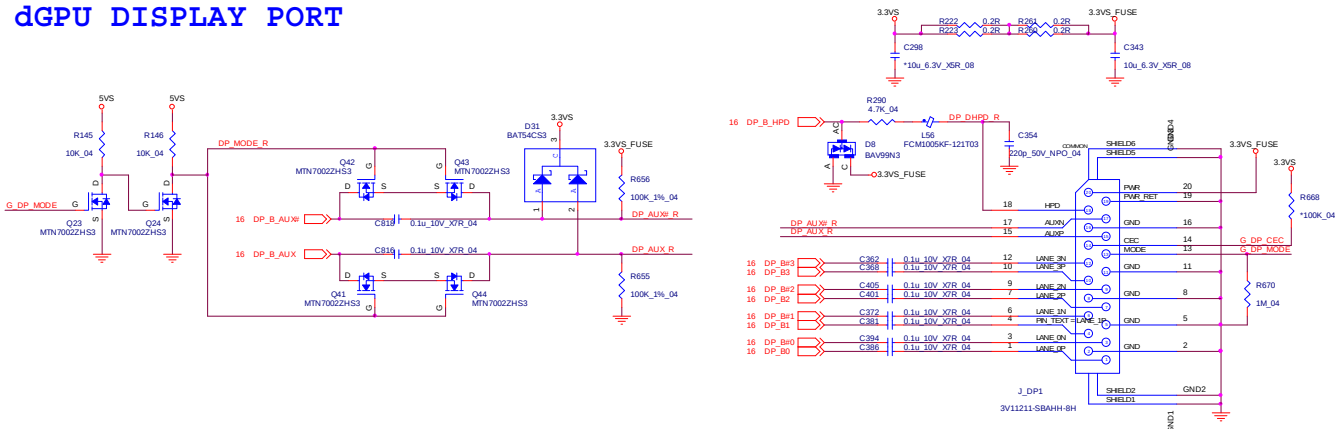

Sheet 18 of 63
Display Port,
New Card

HDMI

HDMI

Sheet 19 of 63
HDMI

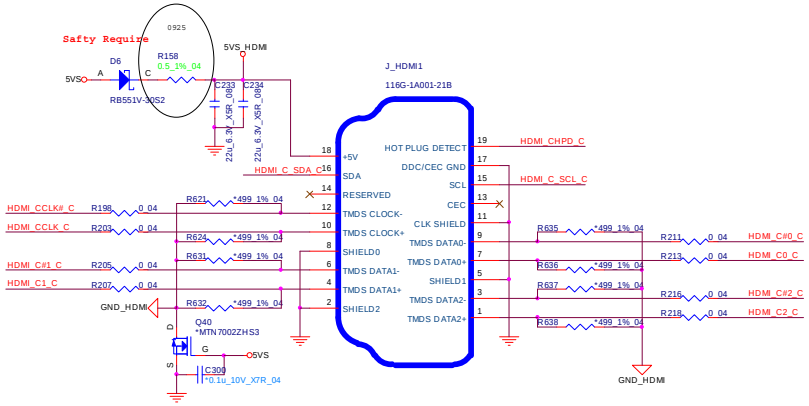

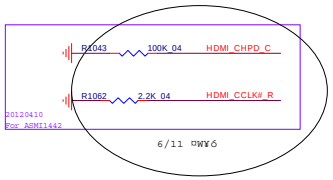

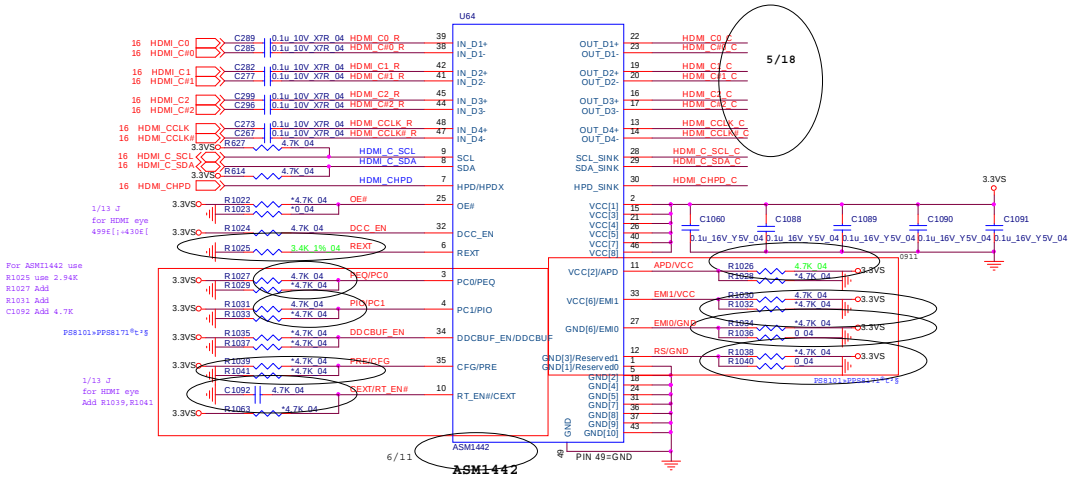

LCD, eDP, 3D Emitter

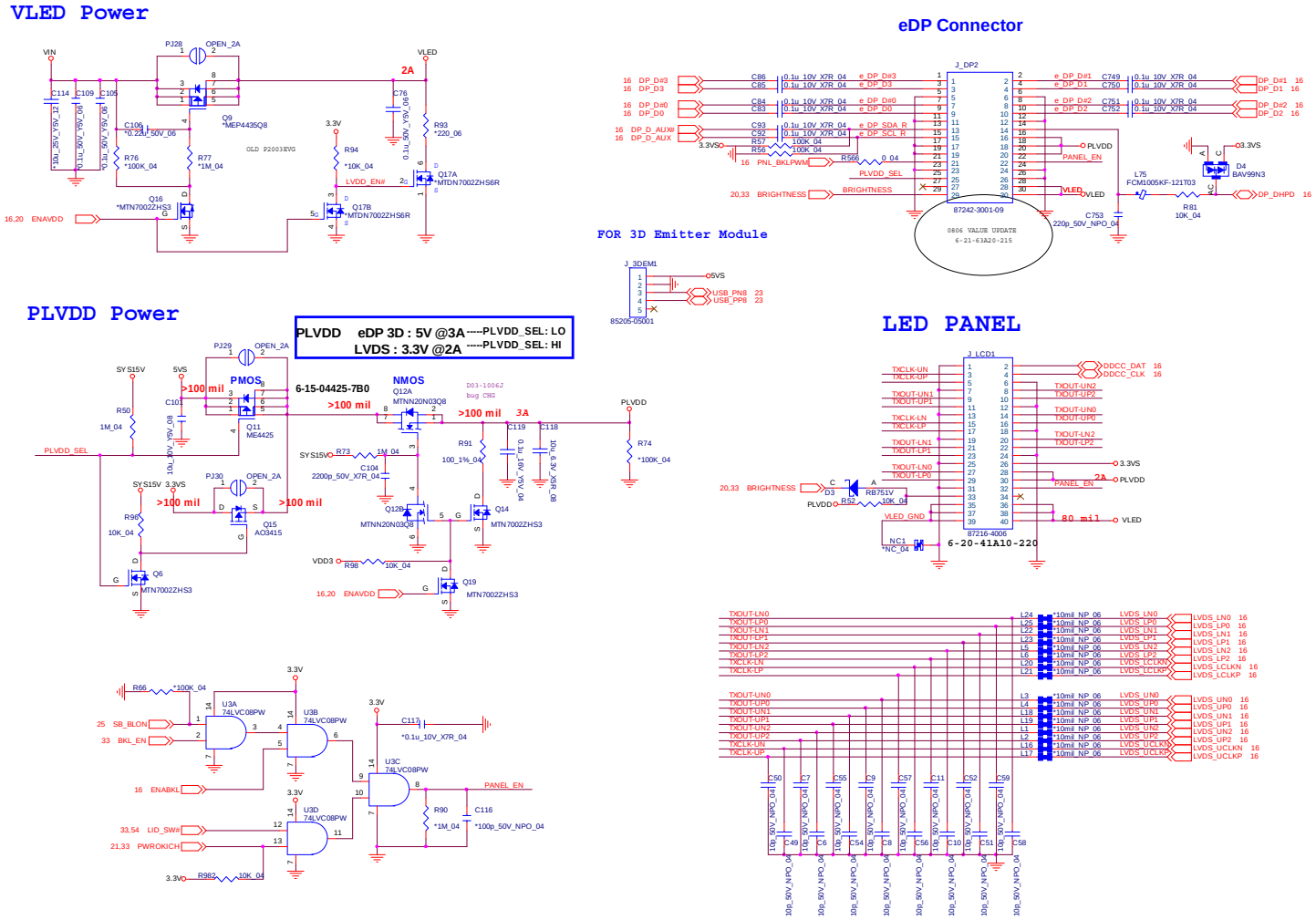

Sheet 20 of 63
LCD, eDP,
3D Emitter

B.Schematic Diagrams

DVI

Sheet 21 of 63
DVI

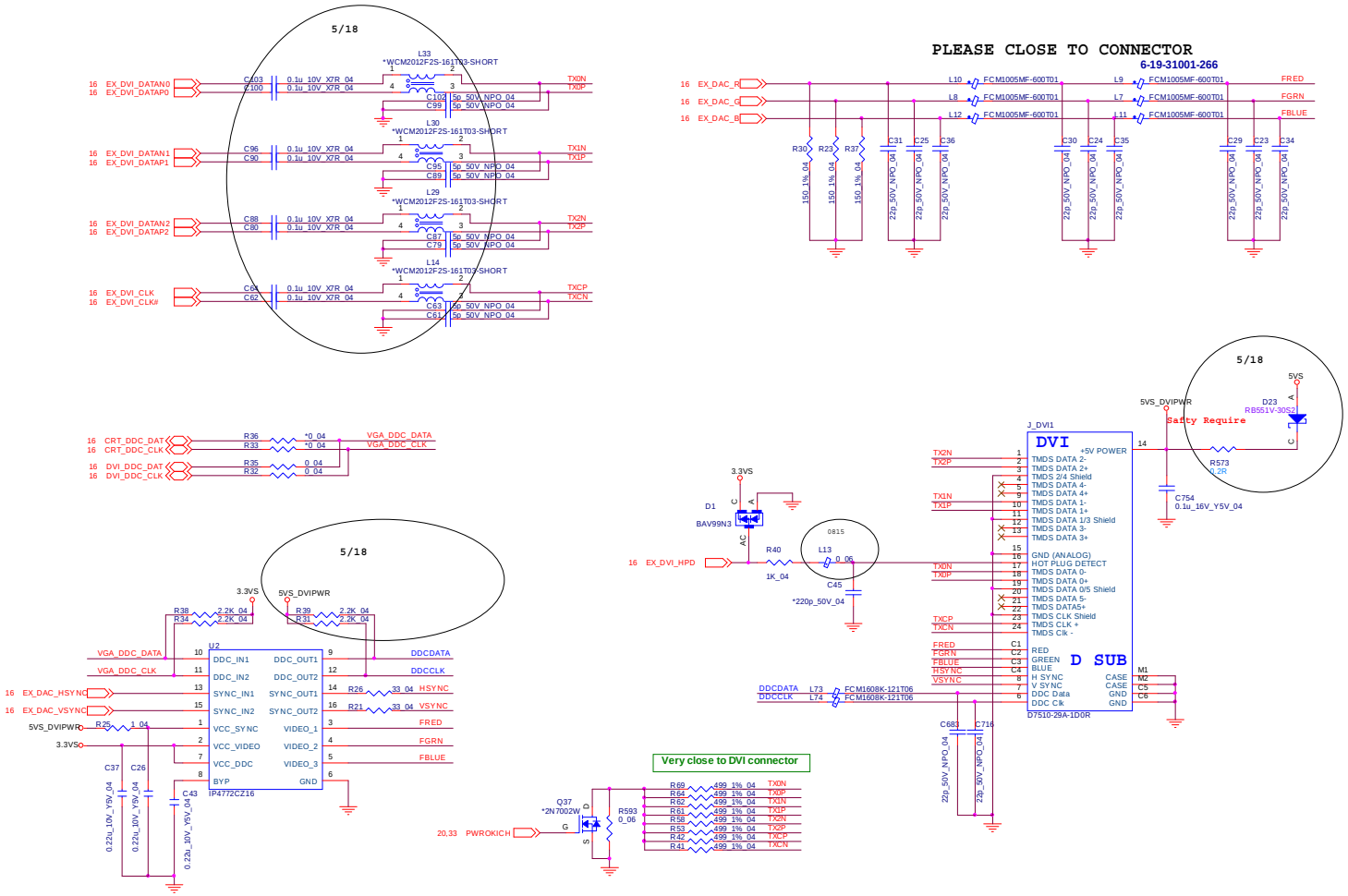

PCH PCI

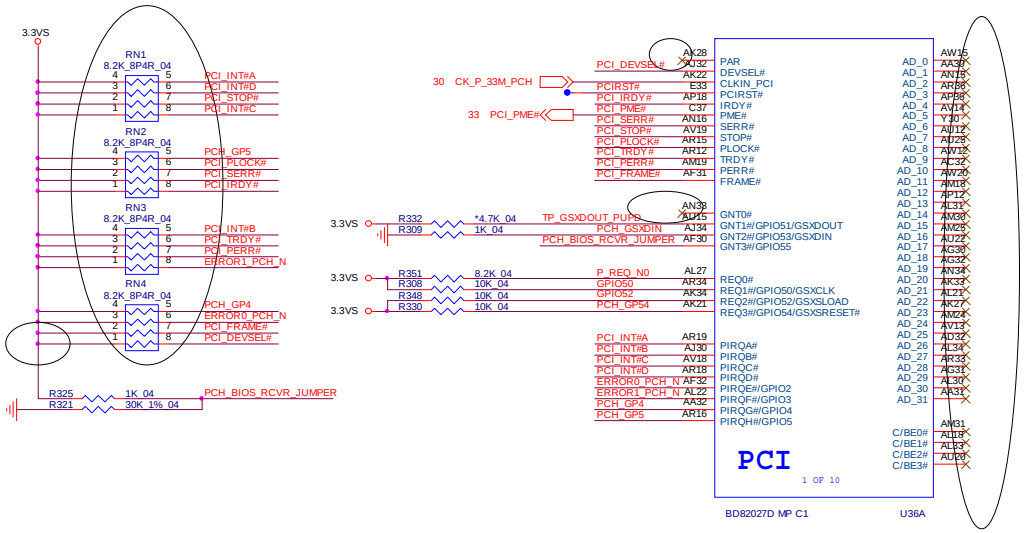

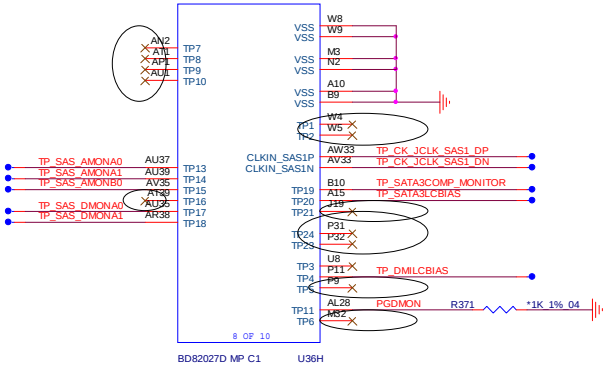

Sheet 22 of 63
PCH PCI

B.Schematic Diagrams

PCH USB/PCIE/DMI

Sheet 23 of 63
PCH USB/PCIE/DMI

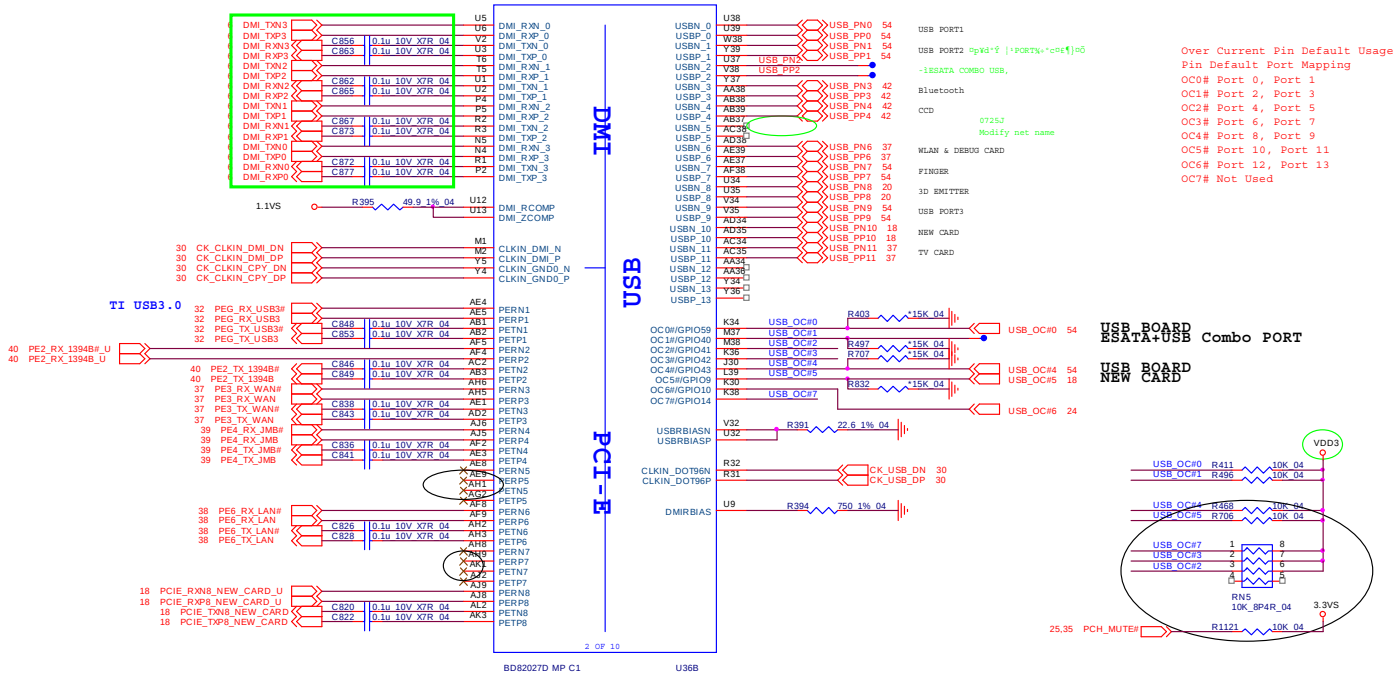

PCH SATA

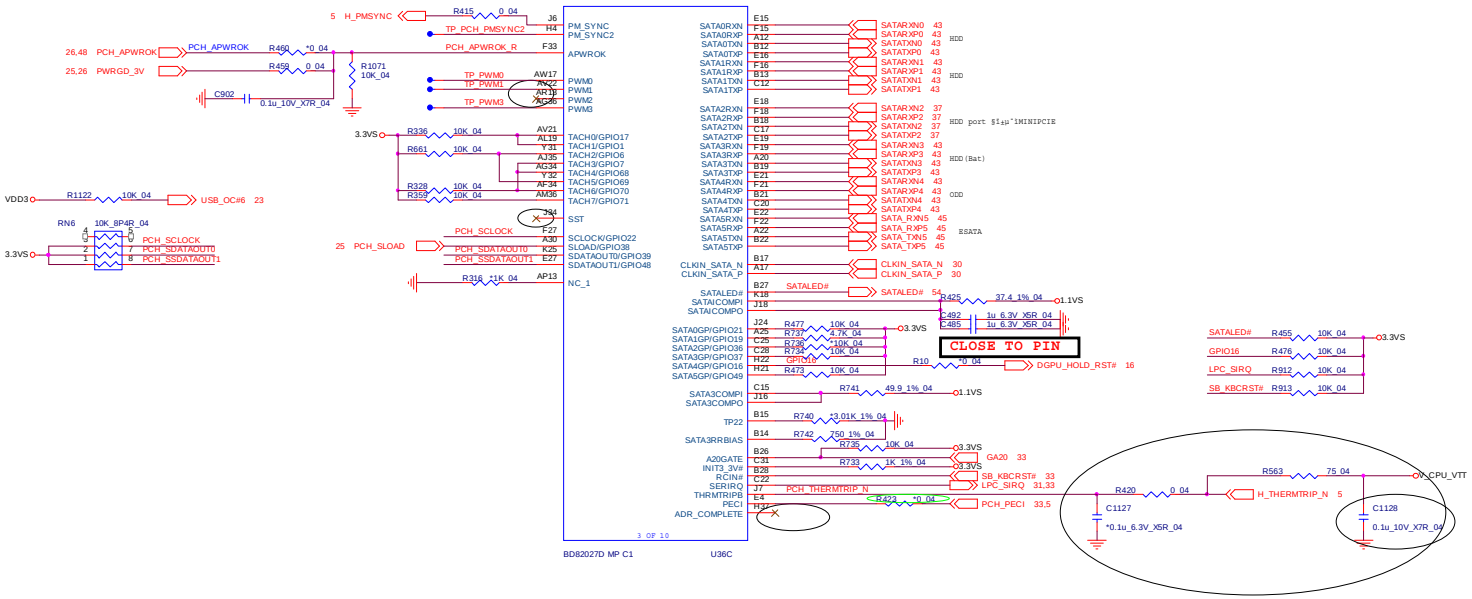

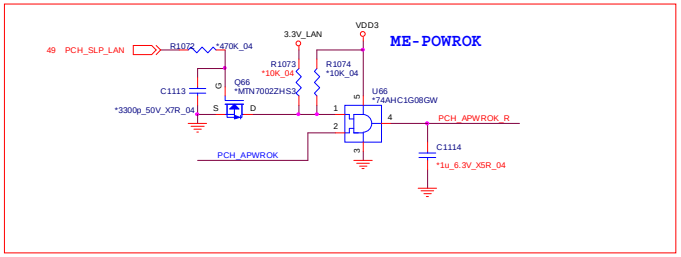

Sheet 24 of 63
PCH SATA

PCH GPIO/HDA

Sheet 25 of 63
PCH GPIO/HDA

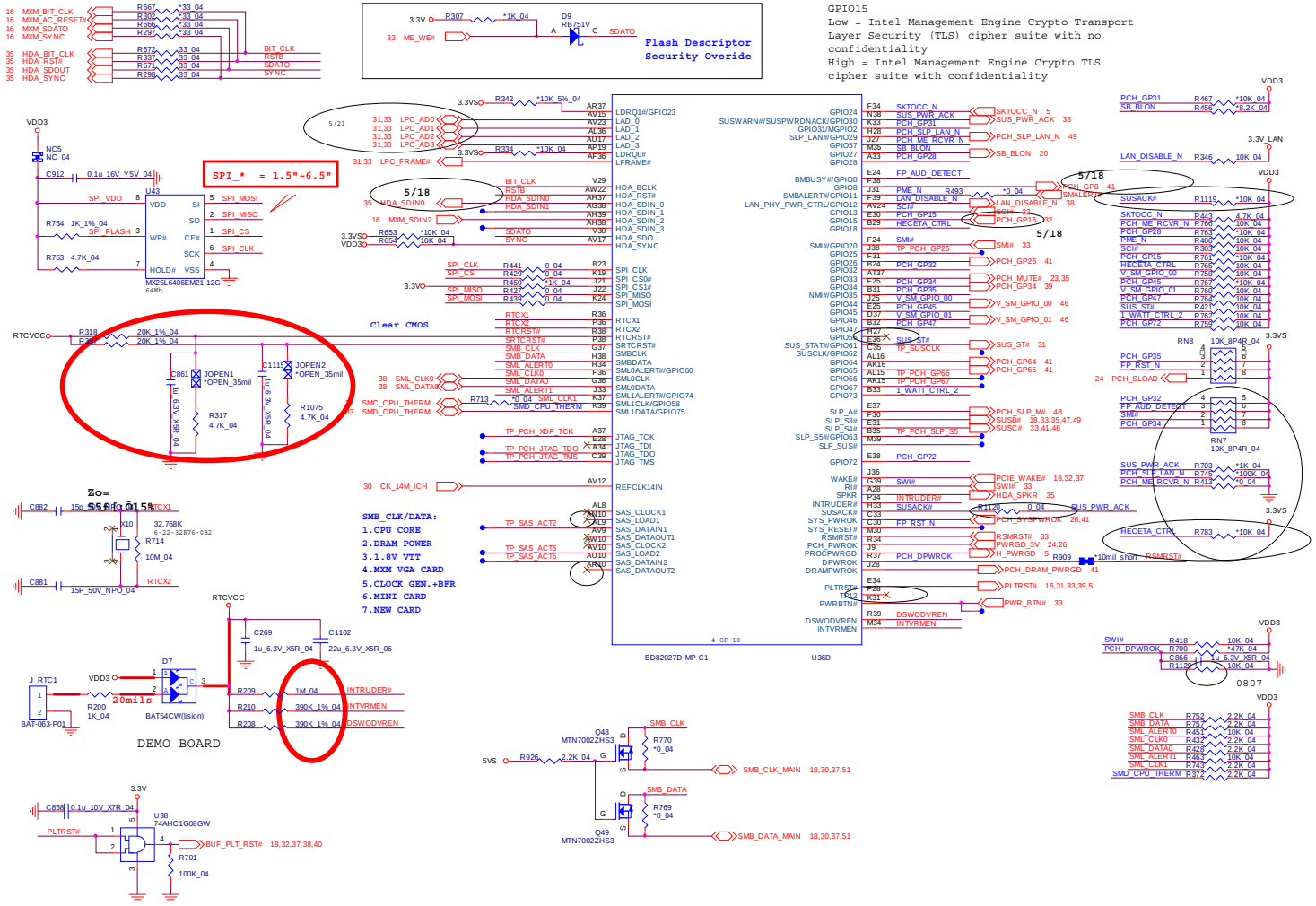

PCH NVRAM

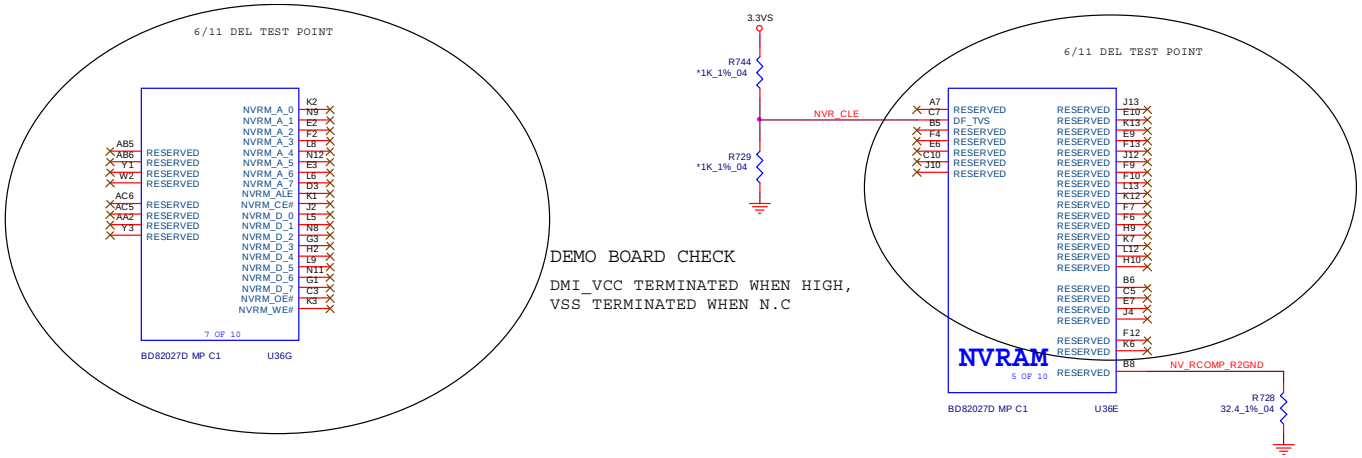

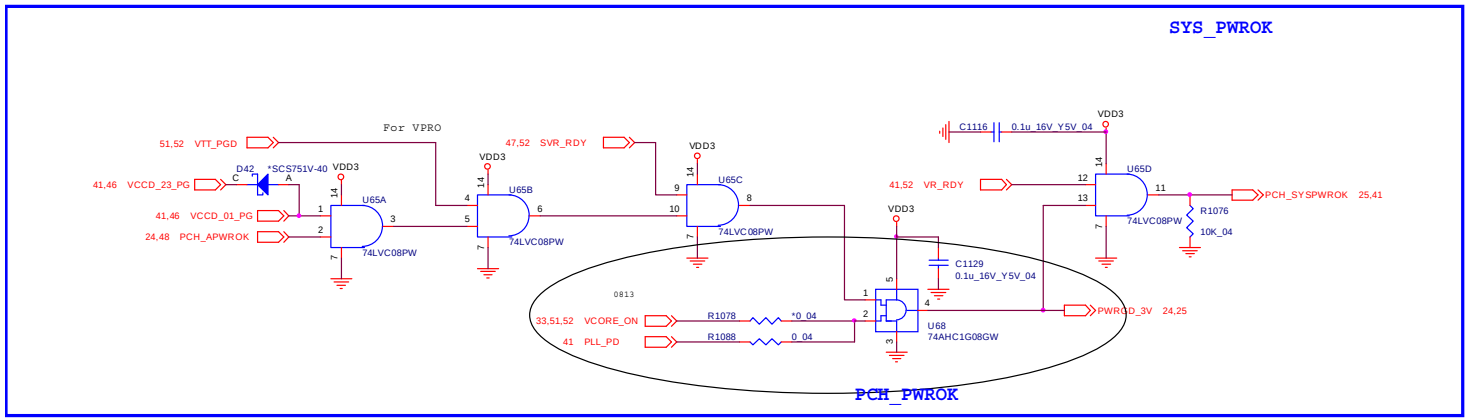

Sheet 26 of 63
PCH NVRAM

PCH SAS

Sheet 27 of 63
PCH SAS

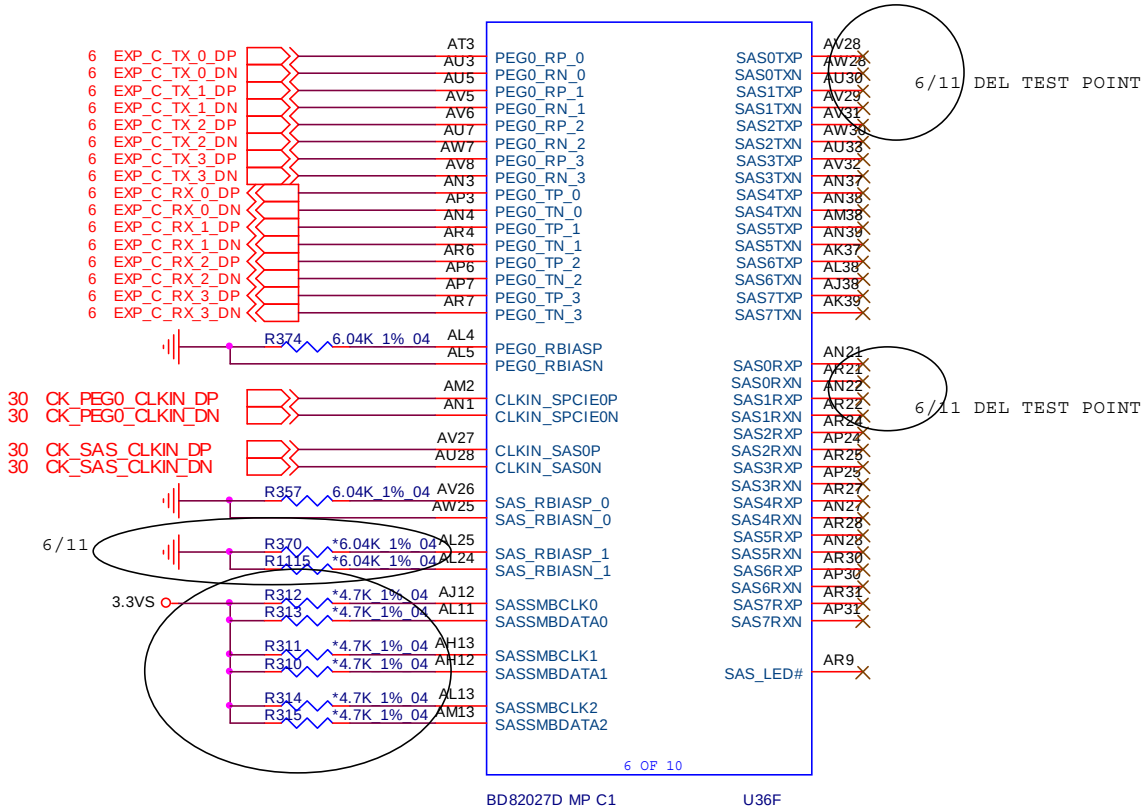

PCH Power

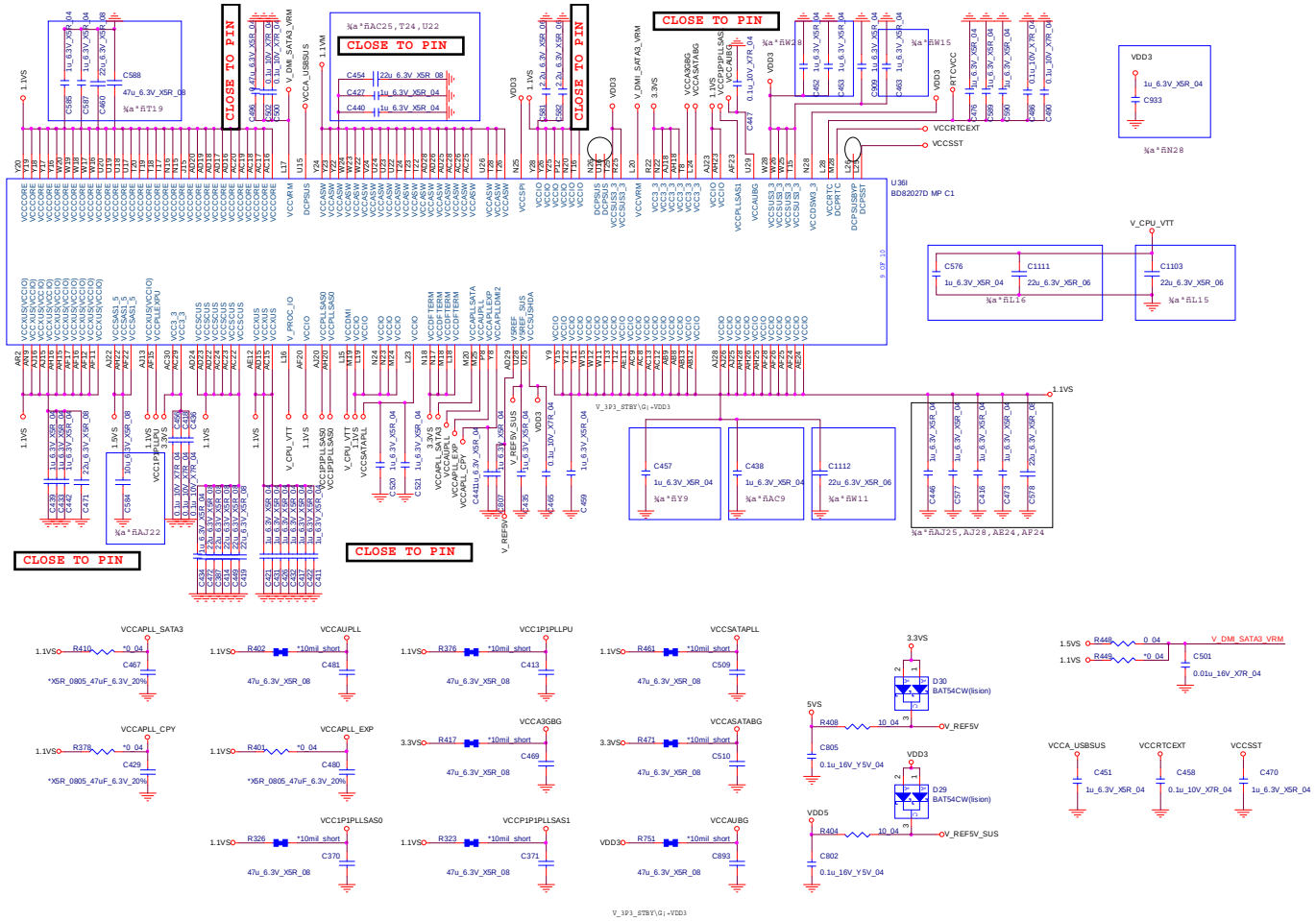

Sheet 28 of 63
PCH Power

PCH GND

Sheet 29 of 63
PCH GND

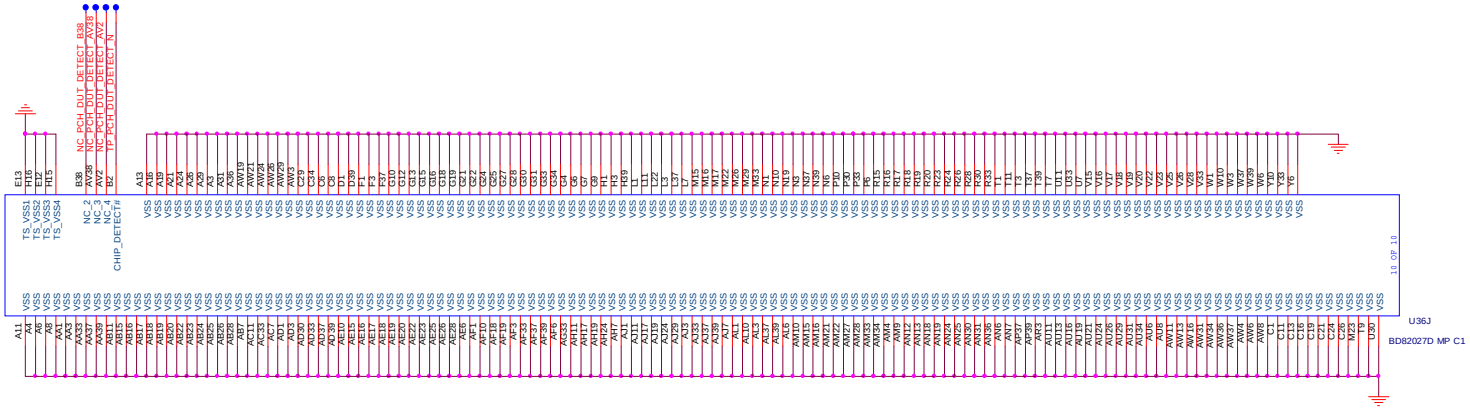

Clock Generator, Buffer

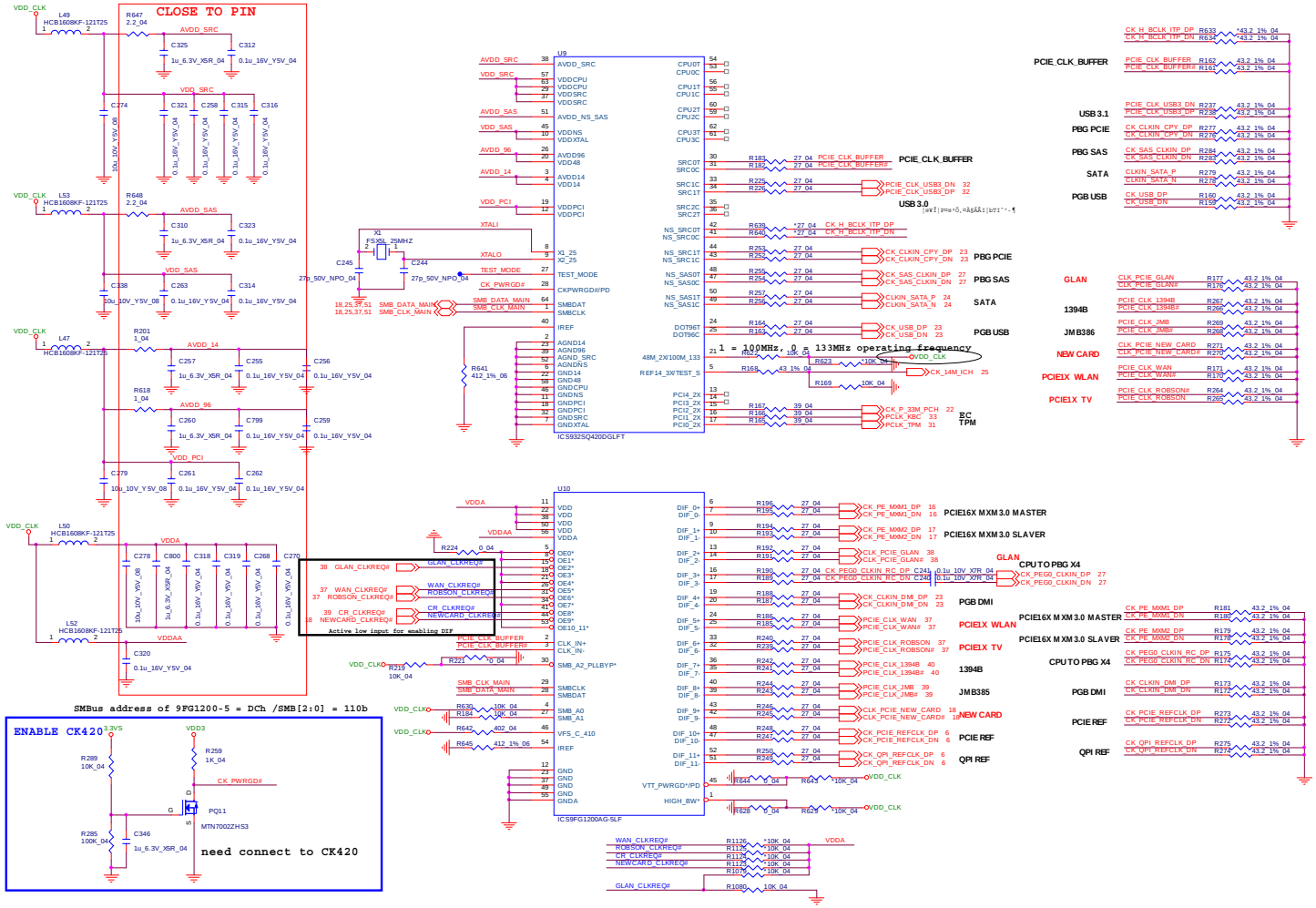

Sheet 30 of 63
Clock Generator, Buffer

TPM 1.2

Sheet 31 of 63
TPM 1.2

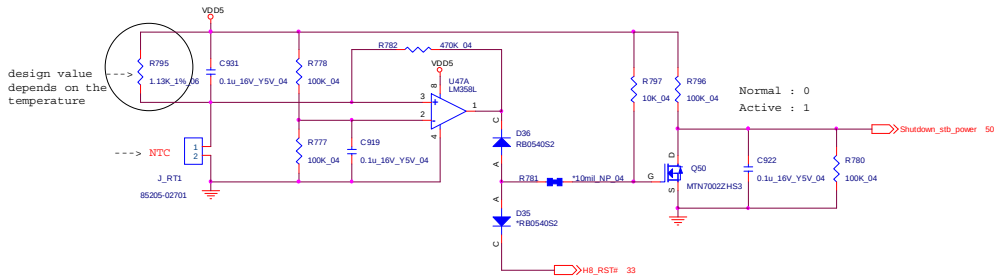

TPM 1.2

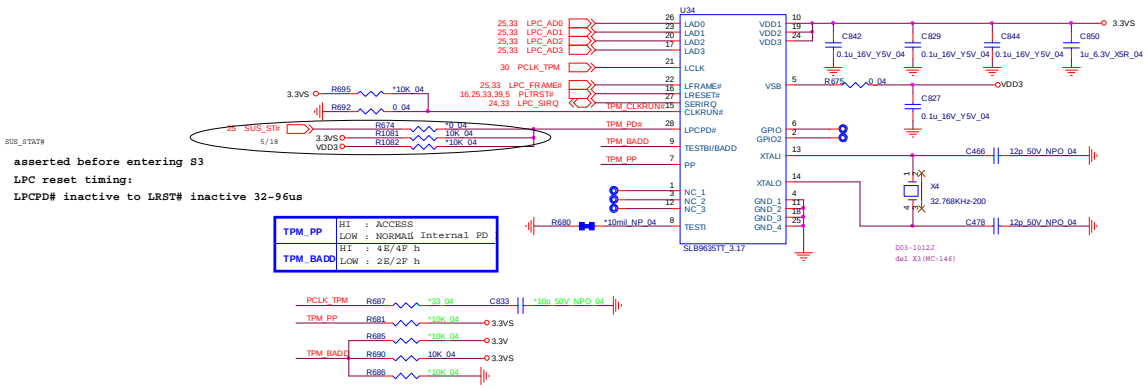

TPM_PP	HI	: ACCESS
	LOW	: NORMAL(Internal PD
TPM_BADD	HI	: 4E/4F h
	LOW	: 2E/2F h

USB 3.0

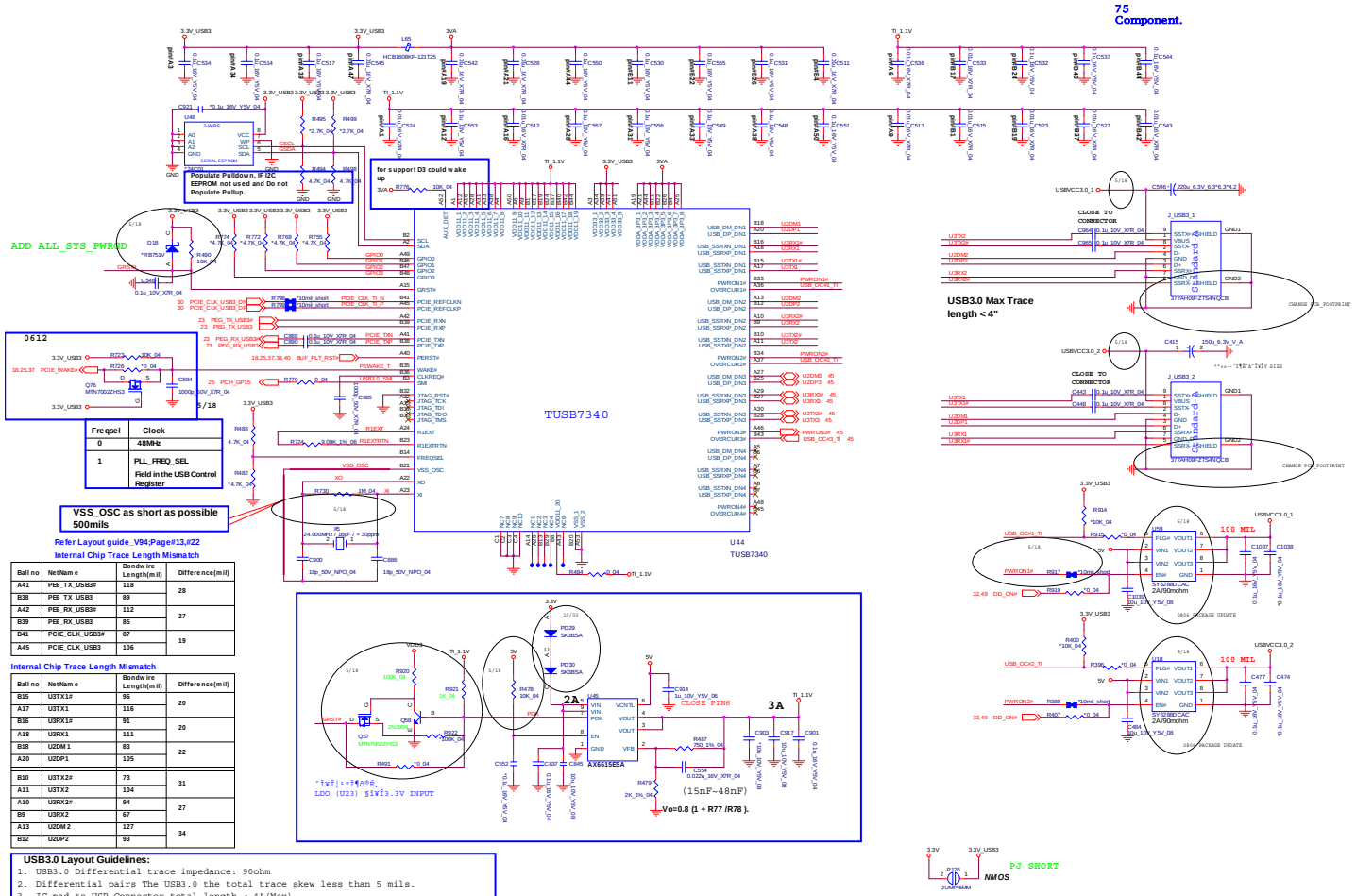

Freqsel	Clock
0	48MHz
1	PLL_FREQ_SEL Field in the USB Control Register

Ball no	NetName	Bondwire Length(mil)	Difference(mil)
A41	PEB_TX_USB3#	118	28
B38	PEB_TX_USB3	89	
A42	PEB_RX_USB3#	112	27
B39	PEB_RX_USB3	85	
B41	PCIE_CLK_USB3#	87	19
A45	PCIE_CLK_USB3	106	

Ball no	NetName	Bondwire Length(mil)	Difference(mil)
B15	U3TX1#	96	20
A17	U3TX1	116	
B16	U3RX1#	91	20
A18	U3RX1	111	
B18	U2DM 1	83	22
A20	U2DP1	105	
B10	U3TX2#	73	31
A11	U3TX2	104	
A10	U3RX2#	94	27
B9	U3RX2	67	
A13	U2DM 2	127	34
B12	U2DP2	93	

USB3.0 Layout Guidelines:

1. USB3.0 Differential trace impedance: 90ohm
2. Differential pairs The USB3.0 the total trace skew less than 5 mils.
3. IC pad to USB Connector total length < 4"(Max)
4. USB3.0 Capacitor 0.1u_10V_X7R_04 Close to Connector.
5. PCIe Differential impedance 85 ohm.
6. PCIe For transmitter and receiver the total trace length: 1"(Min)~~6"(Max).
7. PCIe Number of vias 4via hole(Max).
8. PCIe clock Differential impedance 100 ohm.(by platform).
9. PCIe Differential pairs and pairs spacing 20mils, with Other trace spacing 25mils.
10. Power Trace width=20mils, Spacing=80 mils.

Sheet 32 of 63
USB 3.0

EC ITE8519

Sheet 33 of 63
EC ITE8519

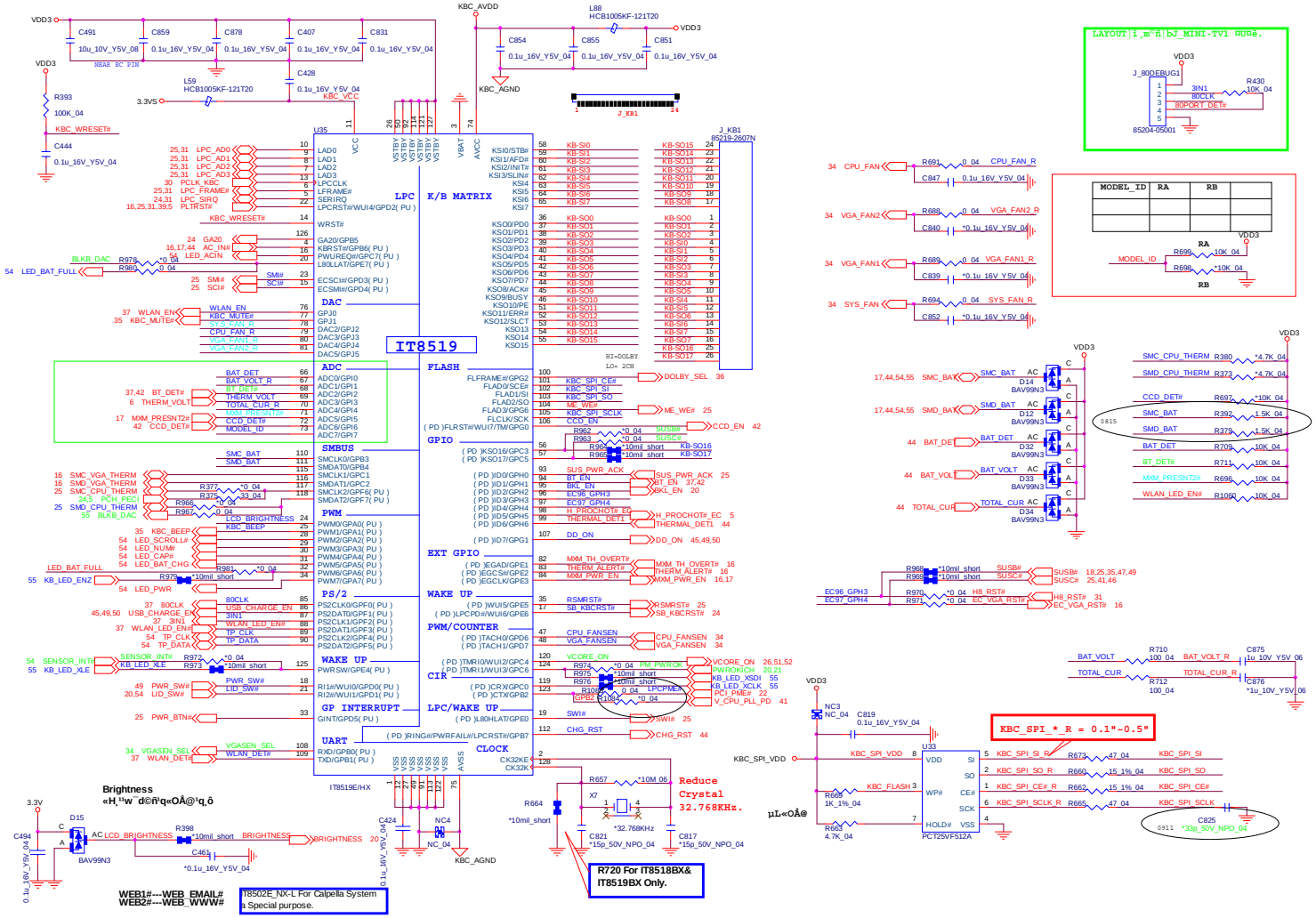

Fan Control

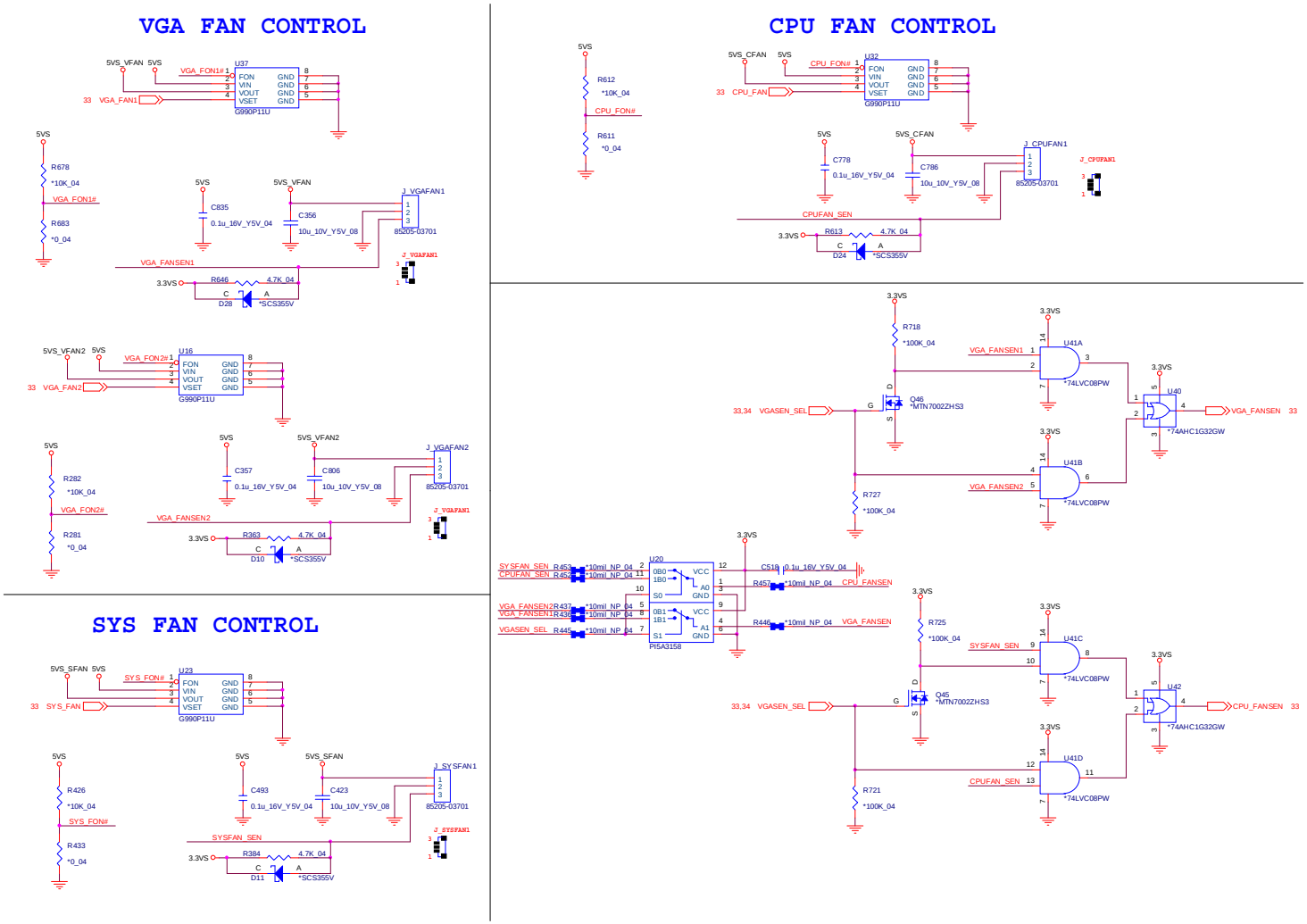

Sheet 34 of 63
Fan Control

Audio Codec ALC892, DMIC

Sheet 35 of 63
Audio Codec
ALC892, DMIC

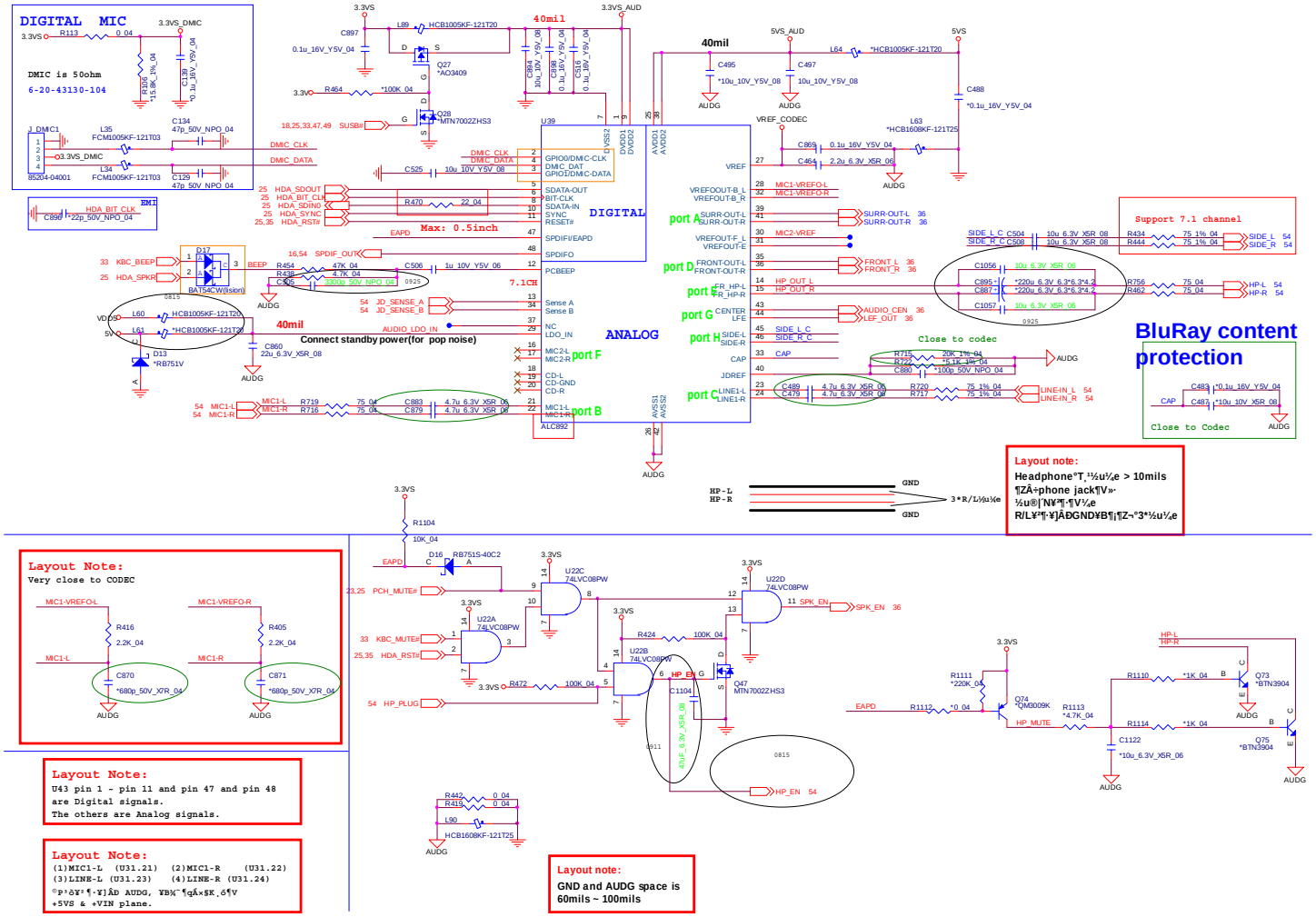

Audio AMP

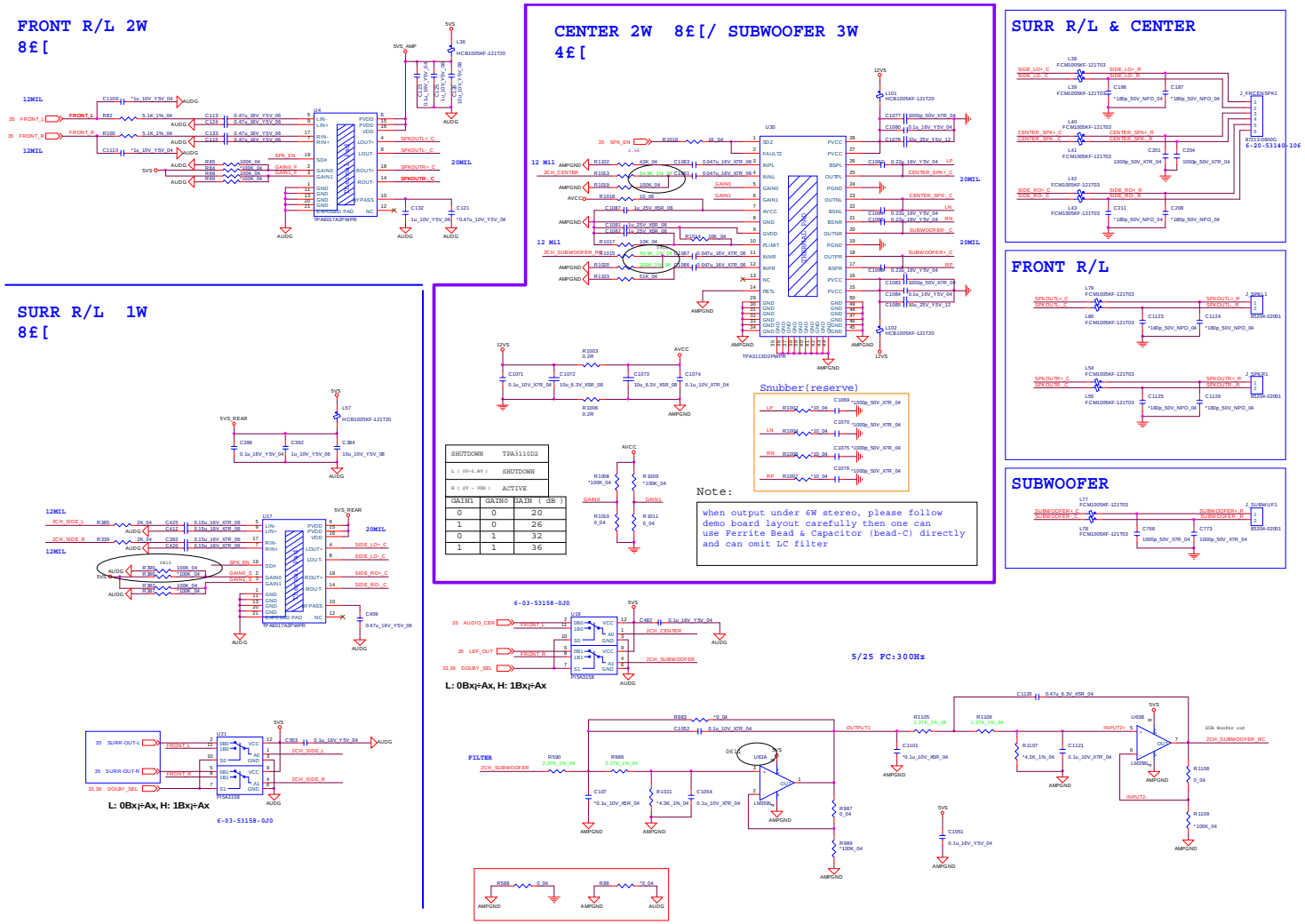

SHUTDOWN	TPA3110D2
L (0V~0.4V)	SHUTDOWN
H (2V ~ VDD)	ACTIVE

GAIN1	GAIN0	GAIN (dB)
0	0	20
1	0	26
0	1	32
1	1	36

Sheet 36 of 63
Audio AMP

B.Schematic Diagrams

WLAN, TV Card

Sheet 37 of 63
WLAN, TV Card

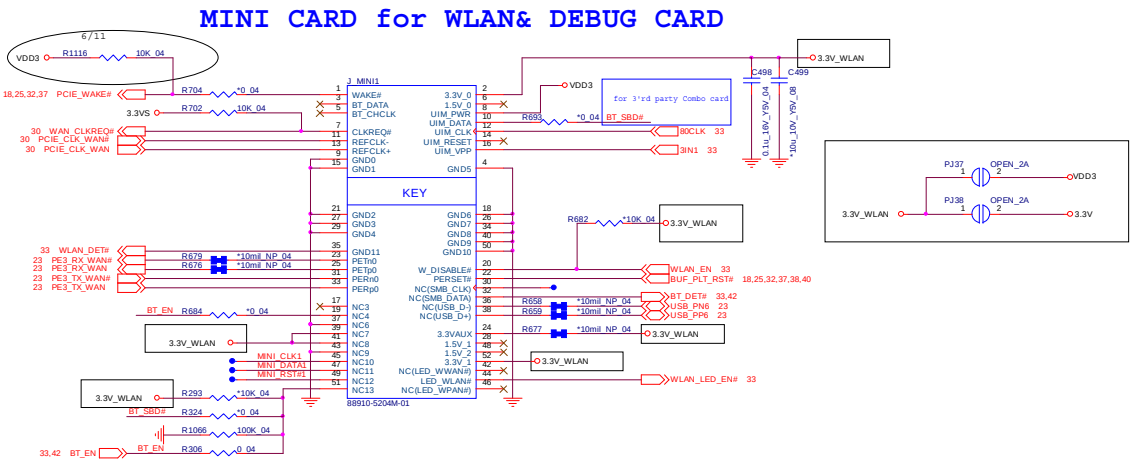

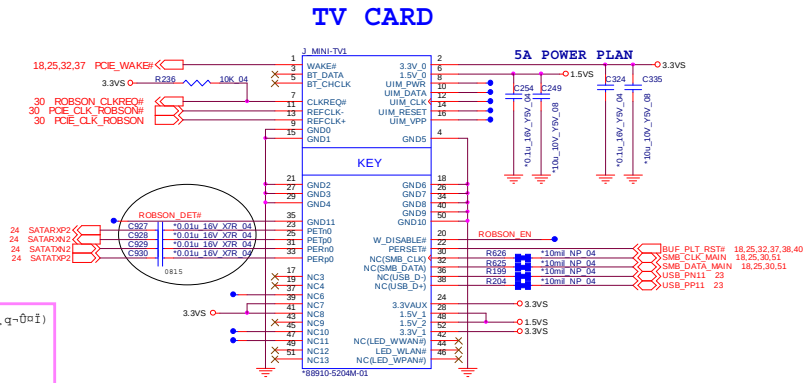


```
MSATA CARD PIN DEFINE ( PIN23 / PIN25 »PCONNECTOR©w¸q¬ÛªÎ)
33  PERp0     34  GND
31  PERn0     32  SMB_DATA
29  GND       30  SMB_CLK
27  GND       28  +1.5V
25  PETn0     26  GND
23  PETp0     24  +3.3Vaux
```

LAN PHY Intel 82579V

LAN 82579V

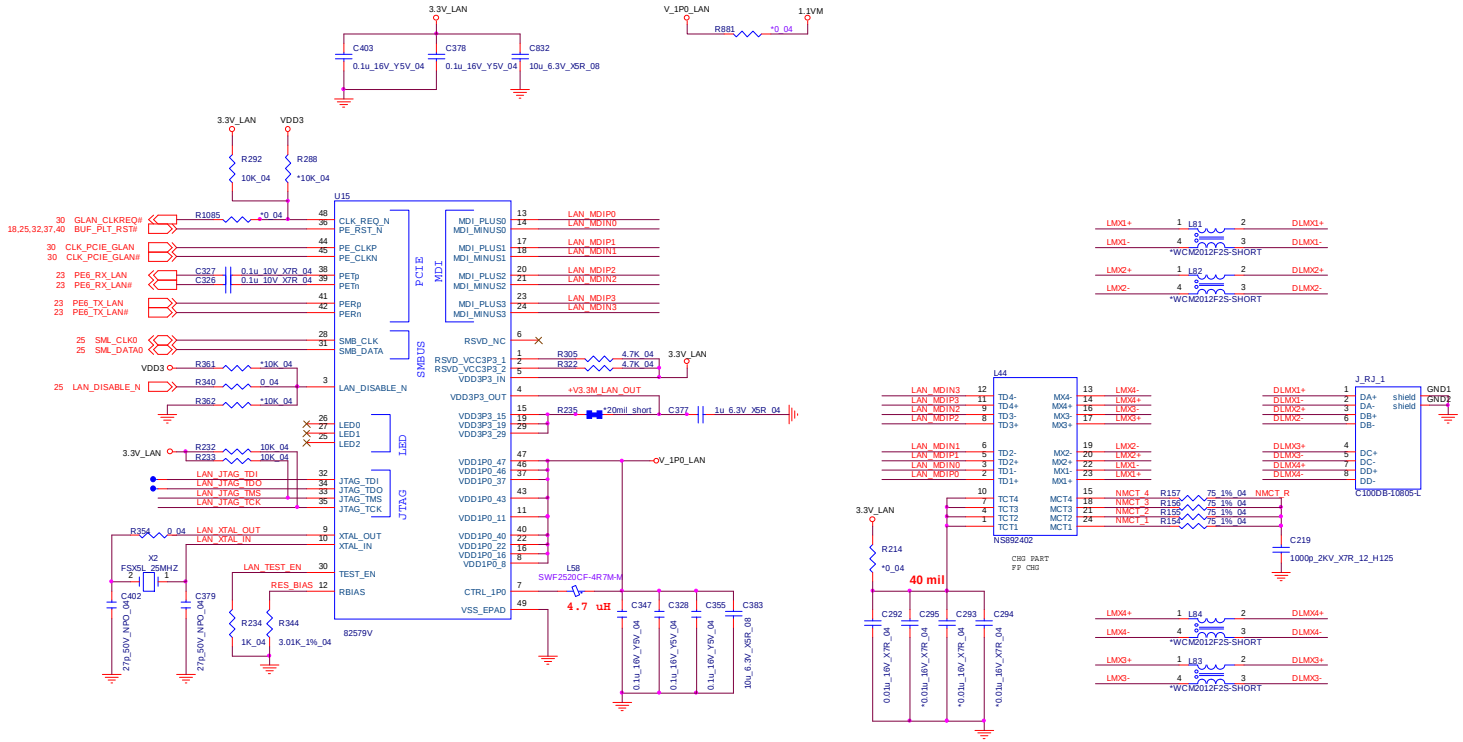

1.05Vdc POWER OPTIONS

Shared with PCH's 1.05V SVR*	Internal SRV
STUFF: R? NO STUFF: R?	STUFF: R? NO STUFF: R?

***NOTE: 1.05Vdc can be shared from PCH's 1.05V SVR (typically the ME rail). When sharing, make sure both +3.3V_LAN & 1.05Vdc rails are remained powered on during ALL Sx states, as required to support WOL.**

Sheet 38 of 63
LAN PHY Intel 82579V

Card Reader RTS5229

Sheet 39 of 63
Card Reader
RTS5229

CARD READER RTS5229

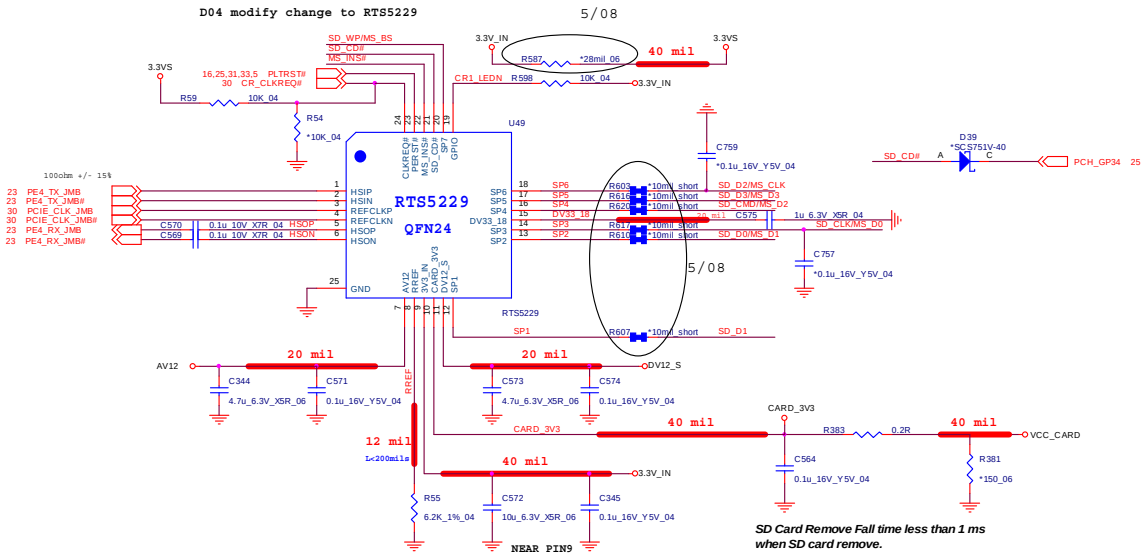

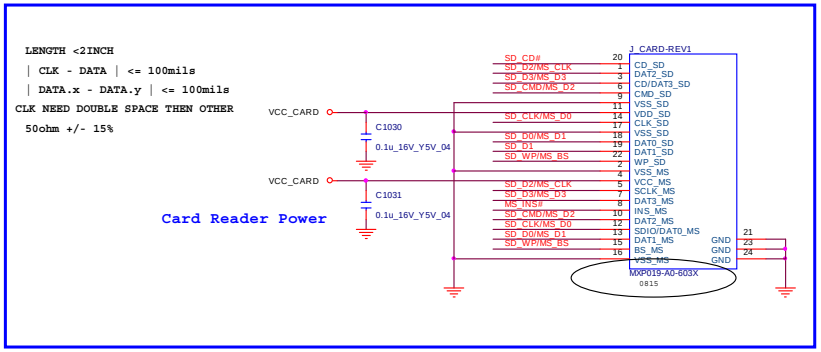

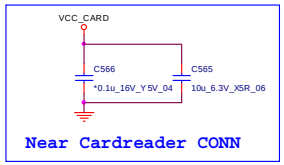

IEEE 1394

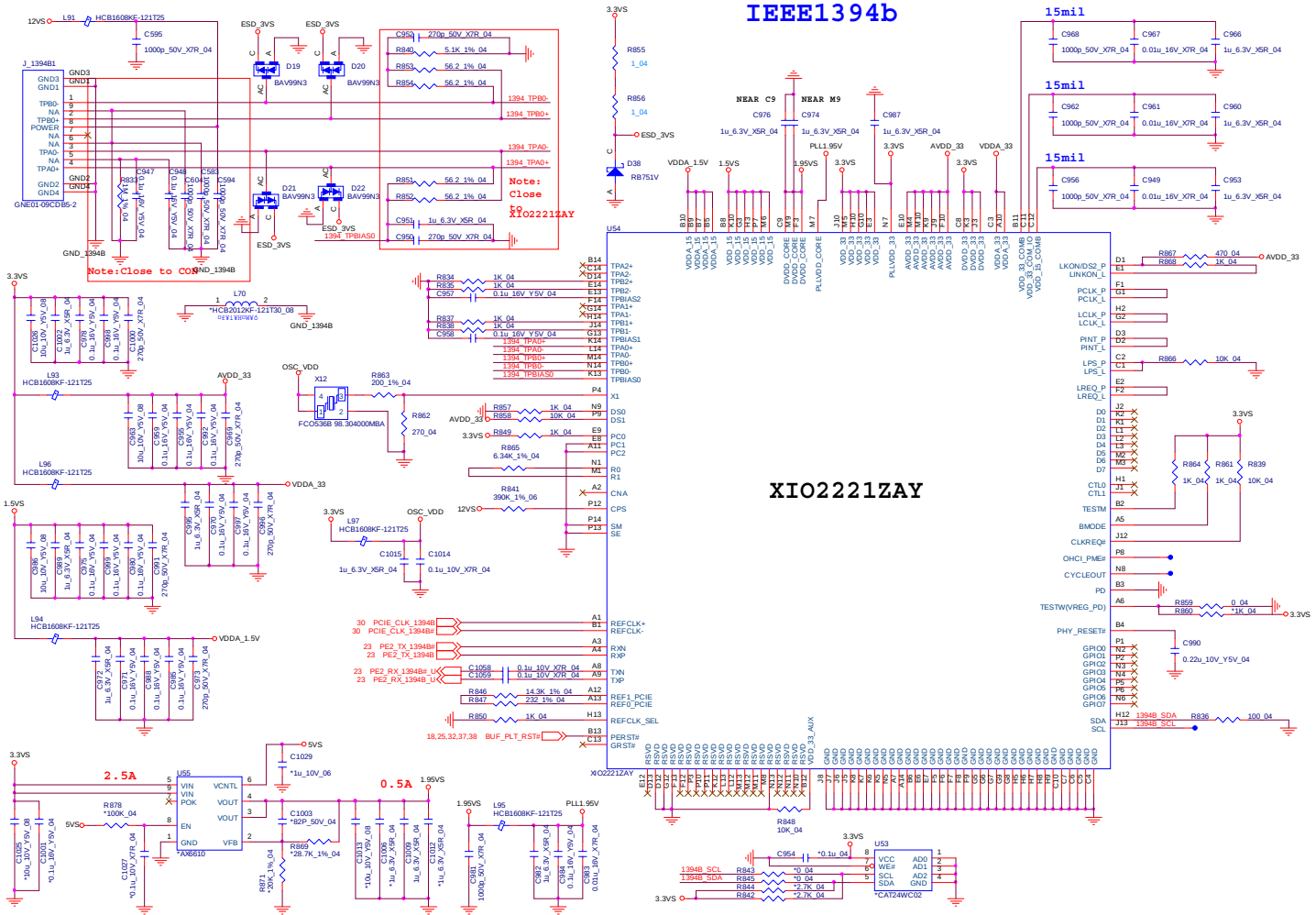

Sheet 40 of 63
IEEE 1394

B.Schematic Diagrams

POWER SYSTEM

Sheet 41 of 63
POWER SYSTEM

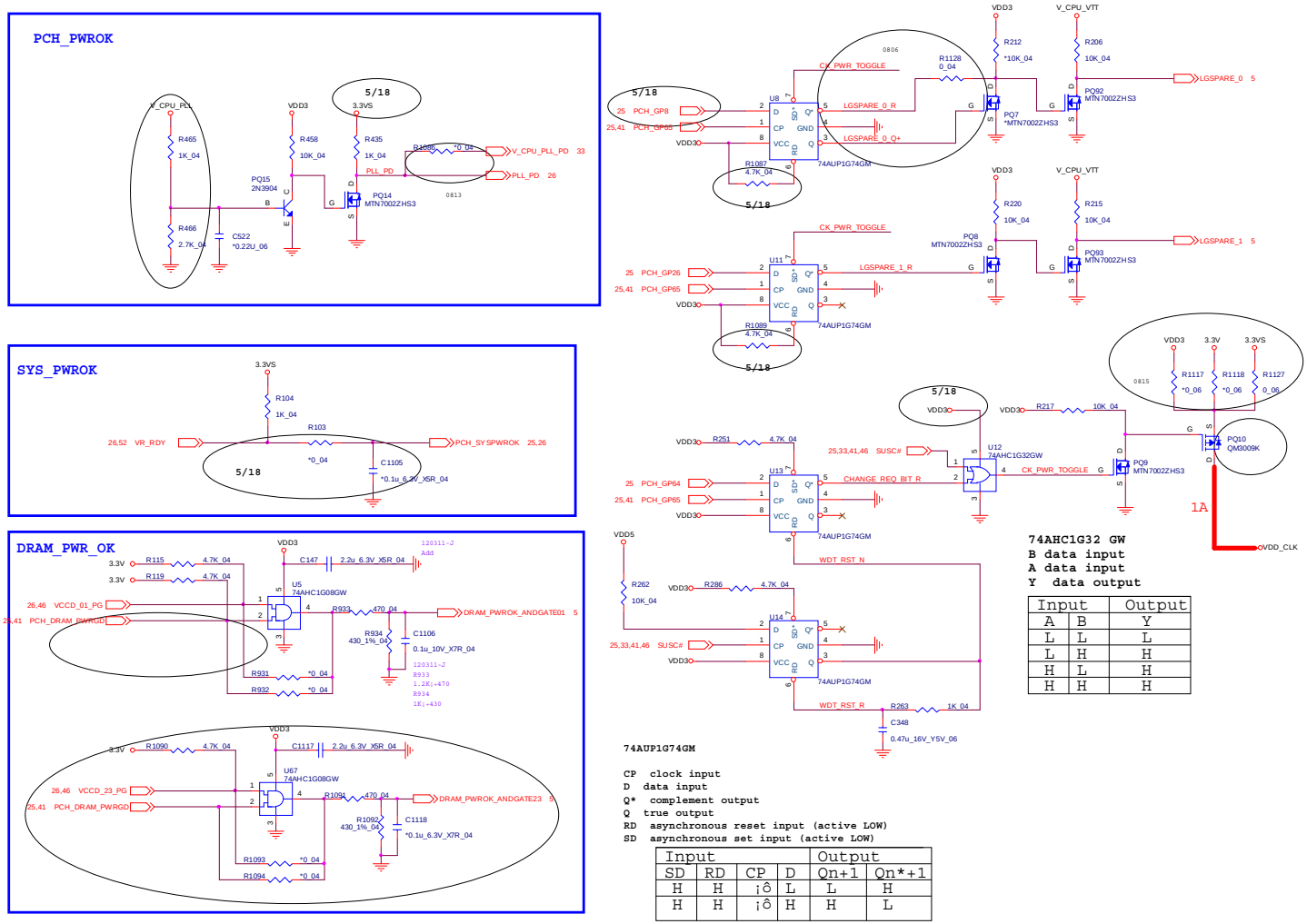

74AHC1G32 GW
B data input
A data input
Y data output

Input		Output
A	B	Y
L	L	L
L	H	H
H	L	H
H	H	H

74AUP1G74GM

CP clock input
D data input
Q* complement output
Q true output
RD asynchronous reset input (active LOW)
SD asynchronous set input (active LOW)

Input				Output	
SD	RD	CP	D	Qn+1	Qn*+1
H	H	↑ô	L	L	H
H	H	↑ô	H	H	L

BT, CCD

Bluetooth

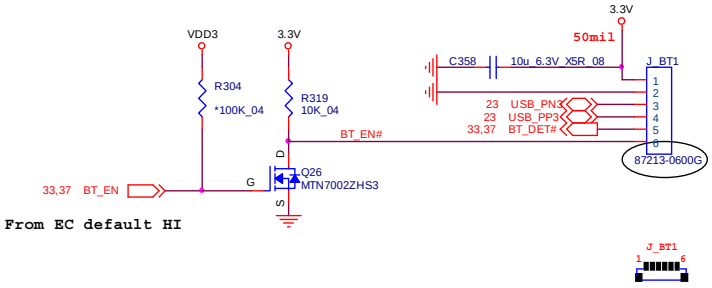

Sheet 42 of 63
BT, CCD

CCD Saving PCB Spaces Solution

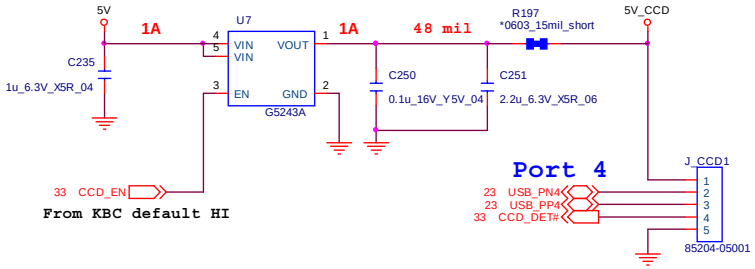

HDD, ODD

Sheet 43 of 63
HDD, ODD

SATA HDD 1~2

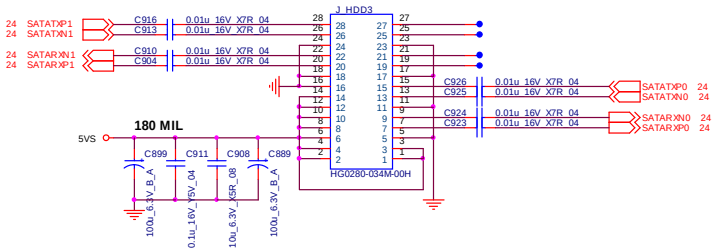

SATA HDD 3

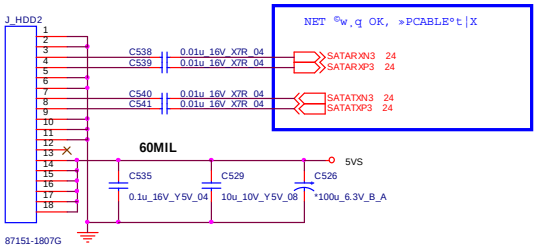

SATA ODD

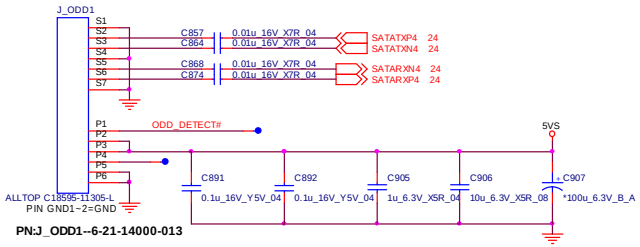

AC_IN, Charger

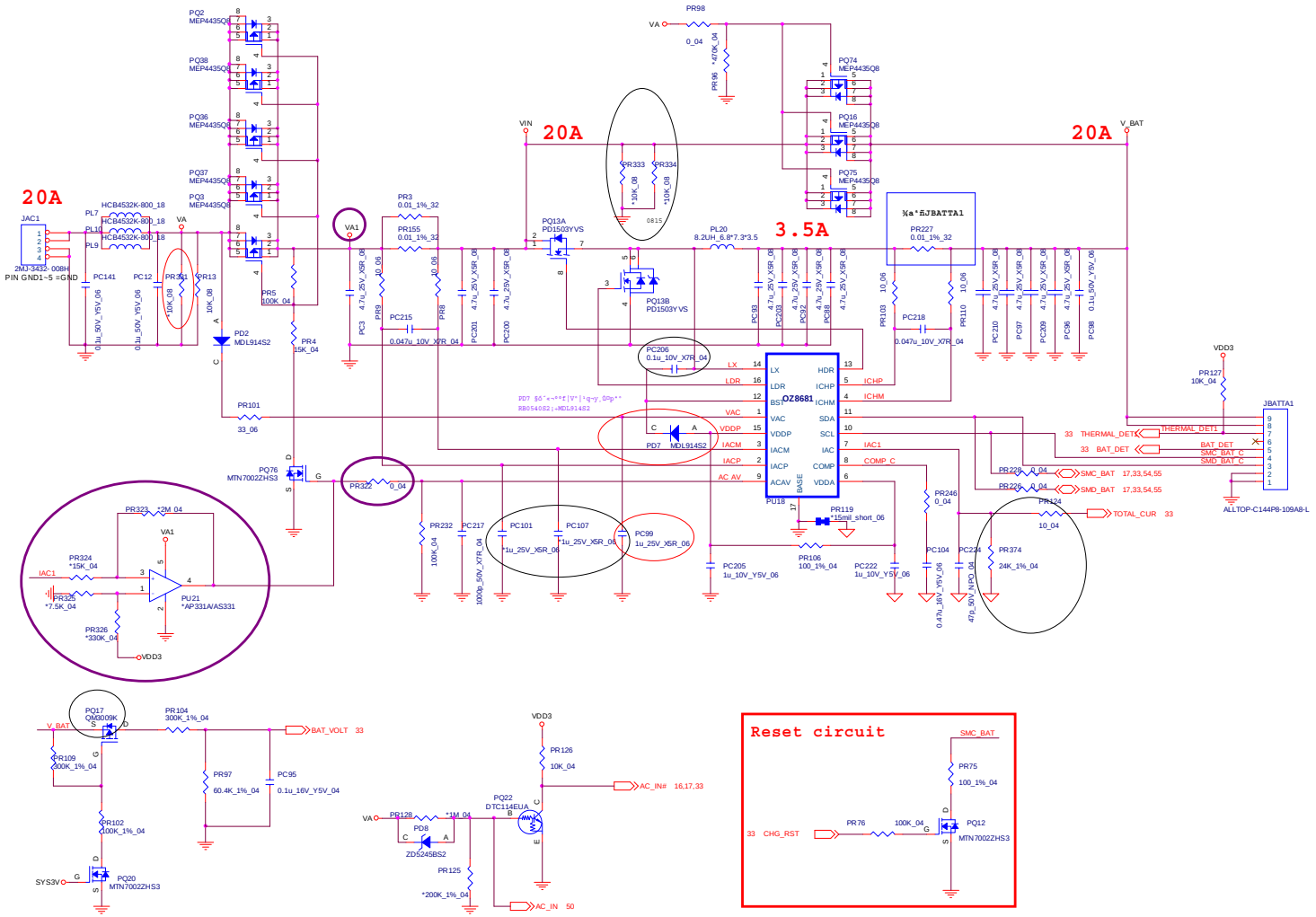

Sheet 44 of 63
AC_IN, Charger

B.Schematic Diagrams

eSATA+USB, USB Charge

Sheet 45 of 63
eSATA+USB, USB Charge

e SATA REDRIVER

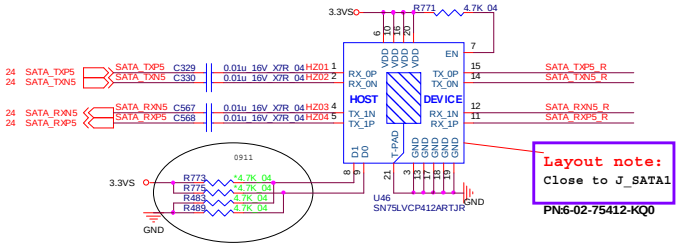

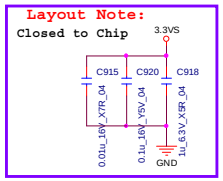

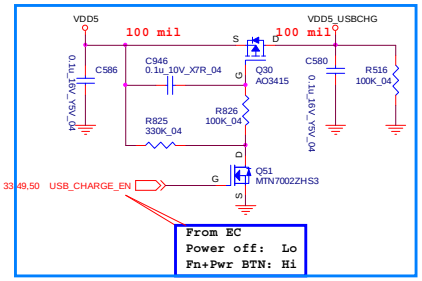

ESATA+USB 3.0 Combo PORT

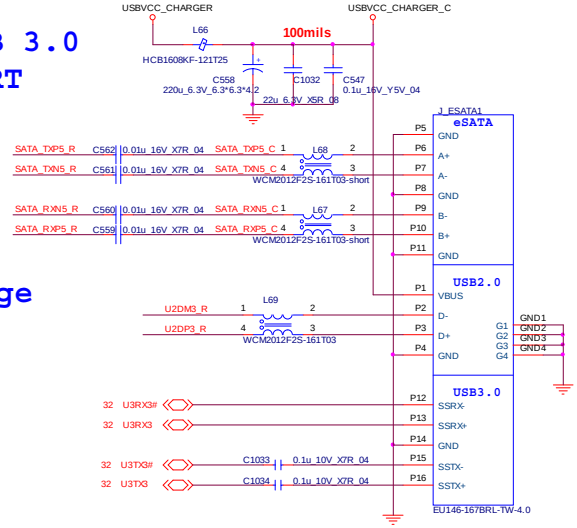

USB Charge

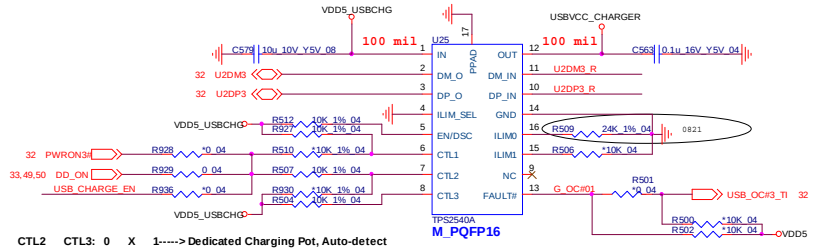

CTL1 CTL2 CTL3: 0 X 1-----> Dedicated Charging Pot, Auto-detect
CTL1 CTL2 CTL3: 1 1 1-----> Charging Downstream Port, BC Specification 1.1
CTL1 CTL2 CTL3: X 1 0-----> Standard Downstream Port, USB 2.0 Mode

		(DD_ON) CTL1	(VDD5) CTL2	(VDD5) CTL3
Mode 1	Power off & Discharge	0	0	0
Mode 2	Power off & Charge	0	1	1
Mode 3	Power on & Charge	1	1	1

Power V_SM 1.5V, VTT MEM

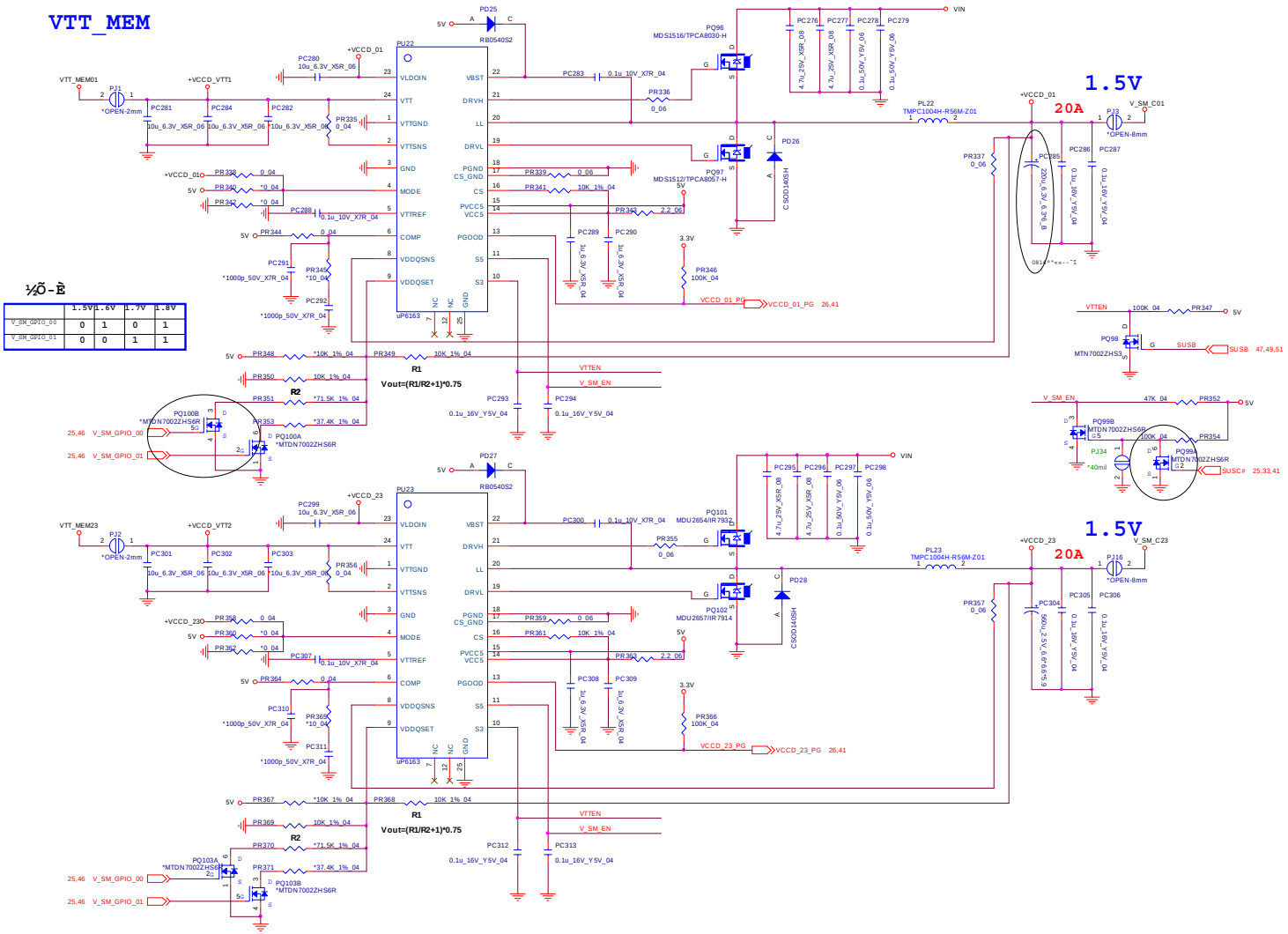

½Ó-È

	1.5V	1.6V	1.7V	1.8V
V_SM_GPIO_00	0	1	0	1
V_SM_GPIO_01	0	0	1	1

Sheet 46 of 63
Power V_SM 1.5V, VTT MEM

Power CPU_PLL, 1.05V

Sheet 47 of 63
Power CPU_PLL, 1.05V

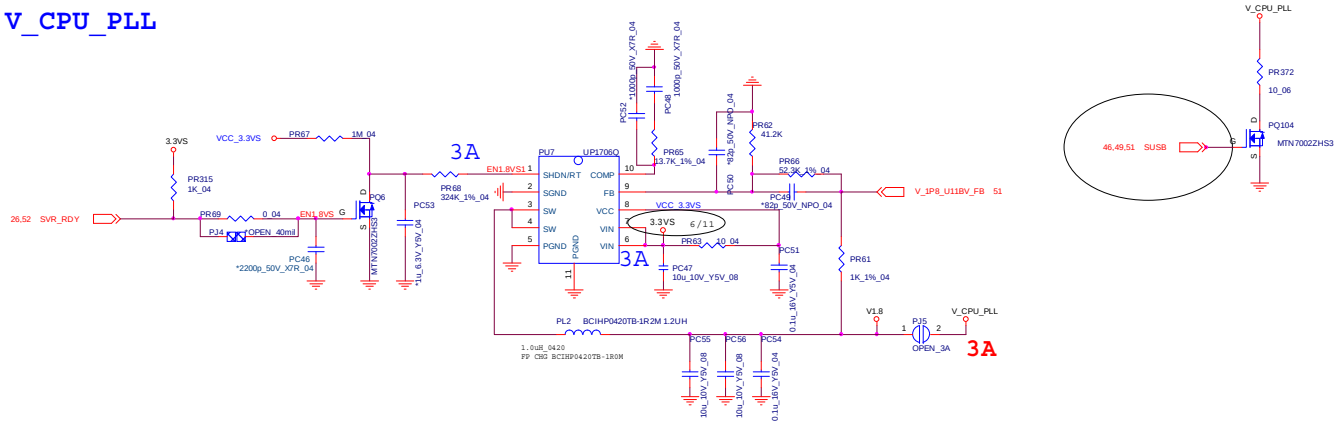

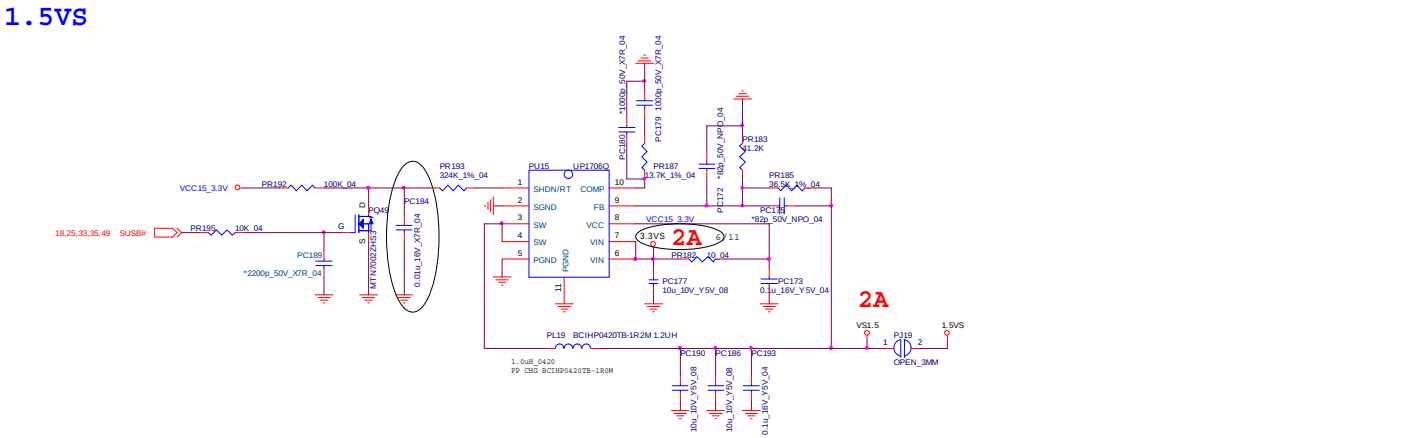

Power 12V, 1.1VM

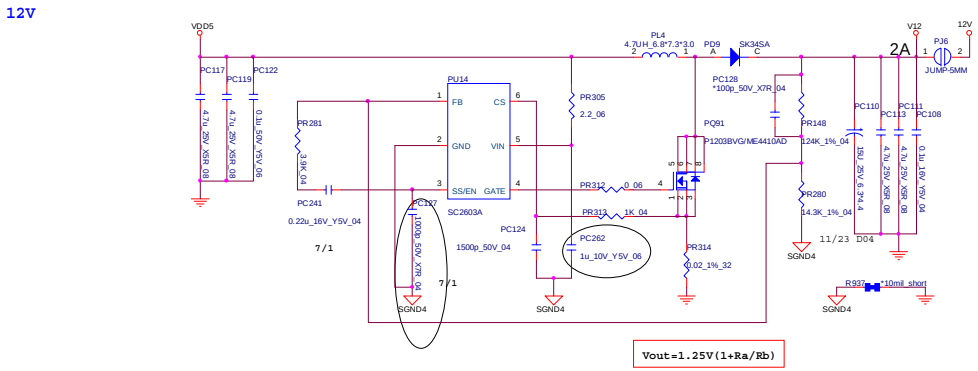

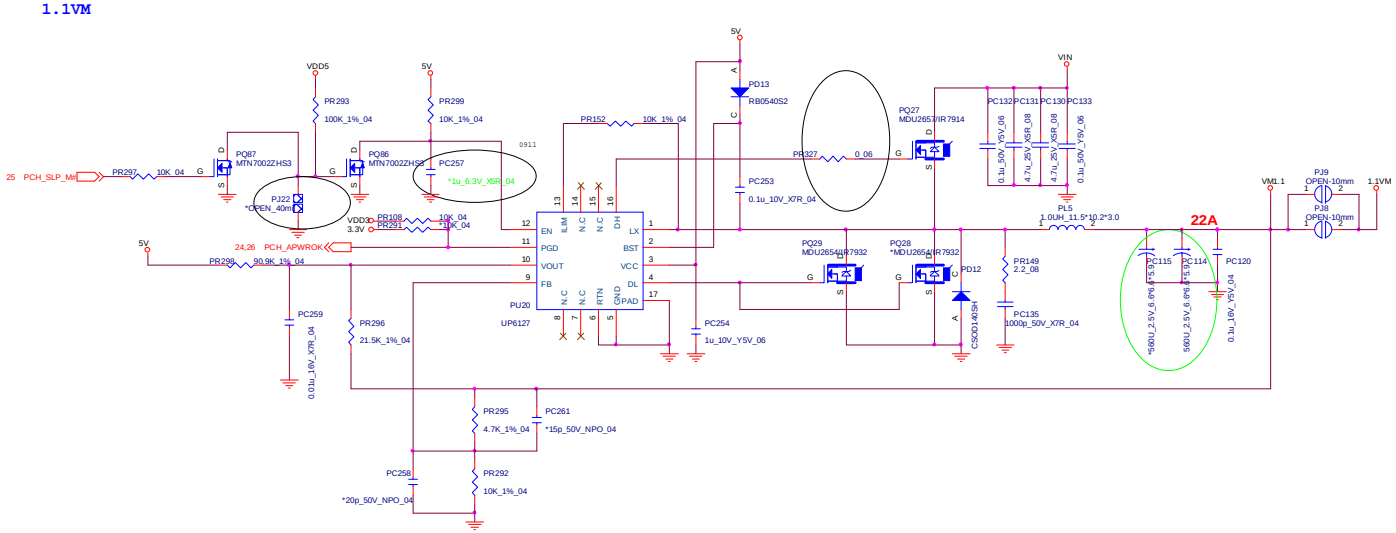

Sheet 48 of 63
Power 12V, 1.1VM

Power Switch

Sheet 49 of 63
Power Switch

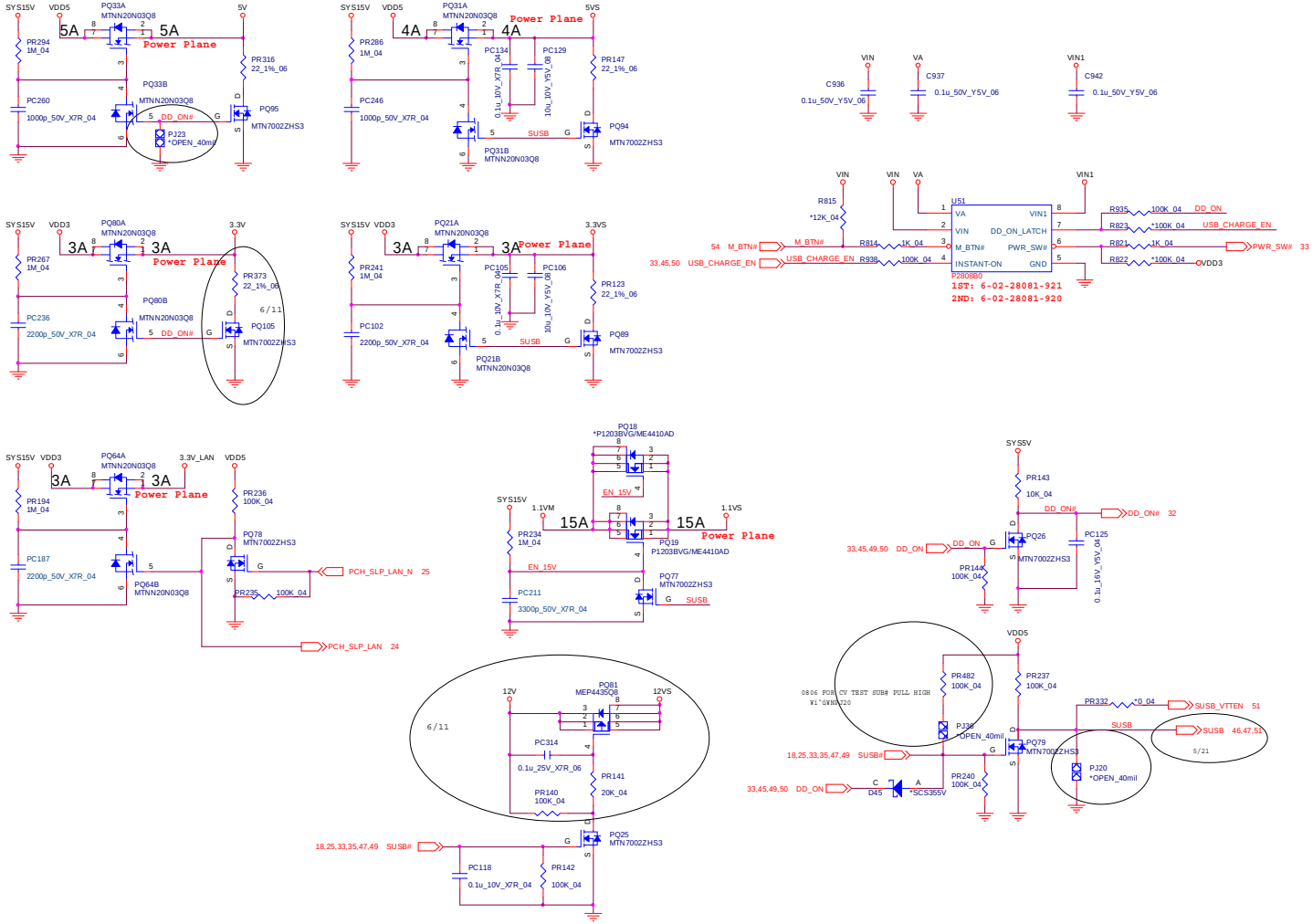

Power VDD3/ VDD5

VDD3,VDD5

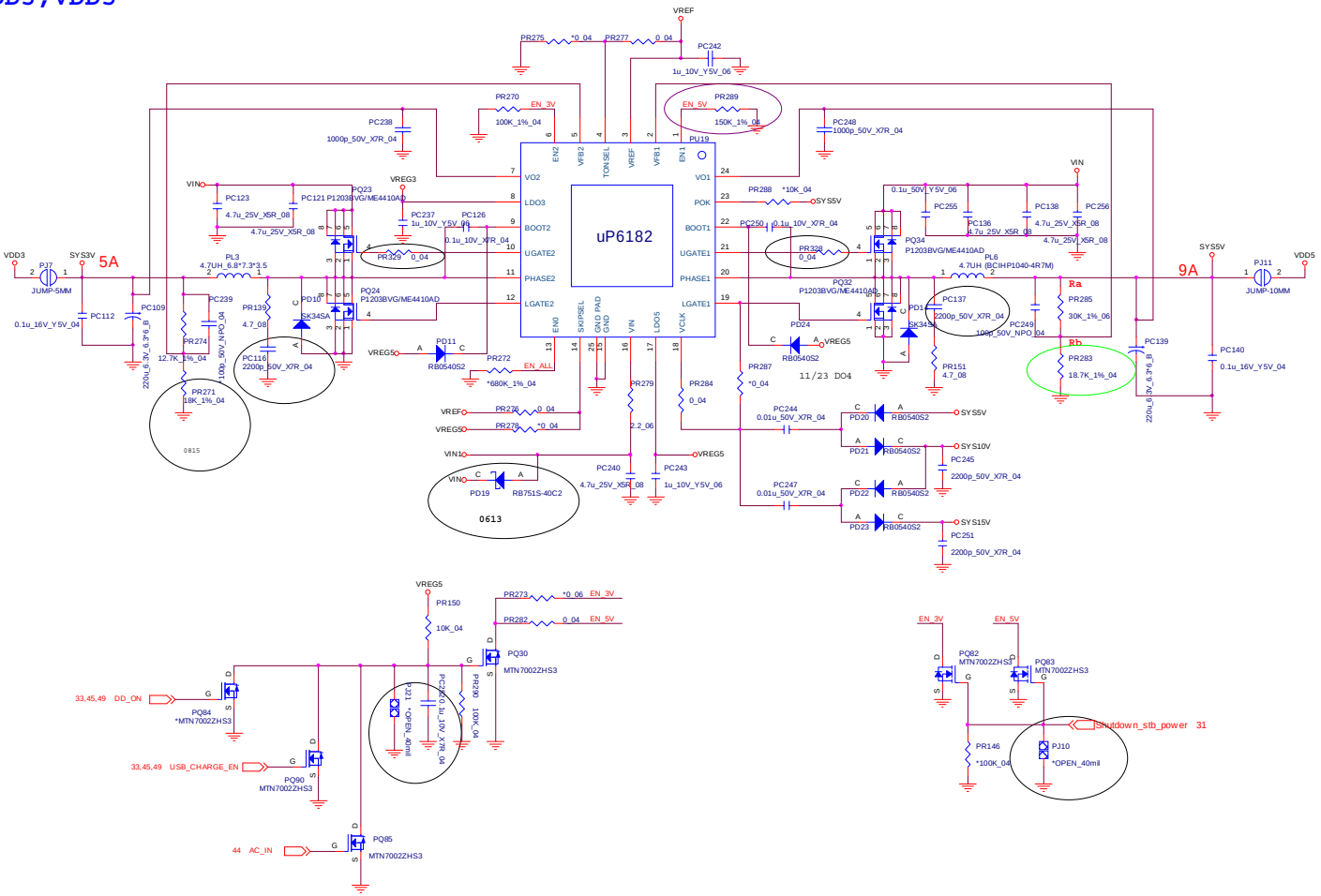

Sheet 50 of 63
Power VDD3/ VDD5

B.Schematic Diagrams

Power CPU_VTT

Sheet 51 of 63
Power CPU_VTT

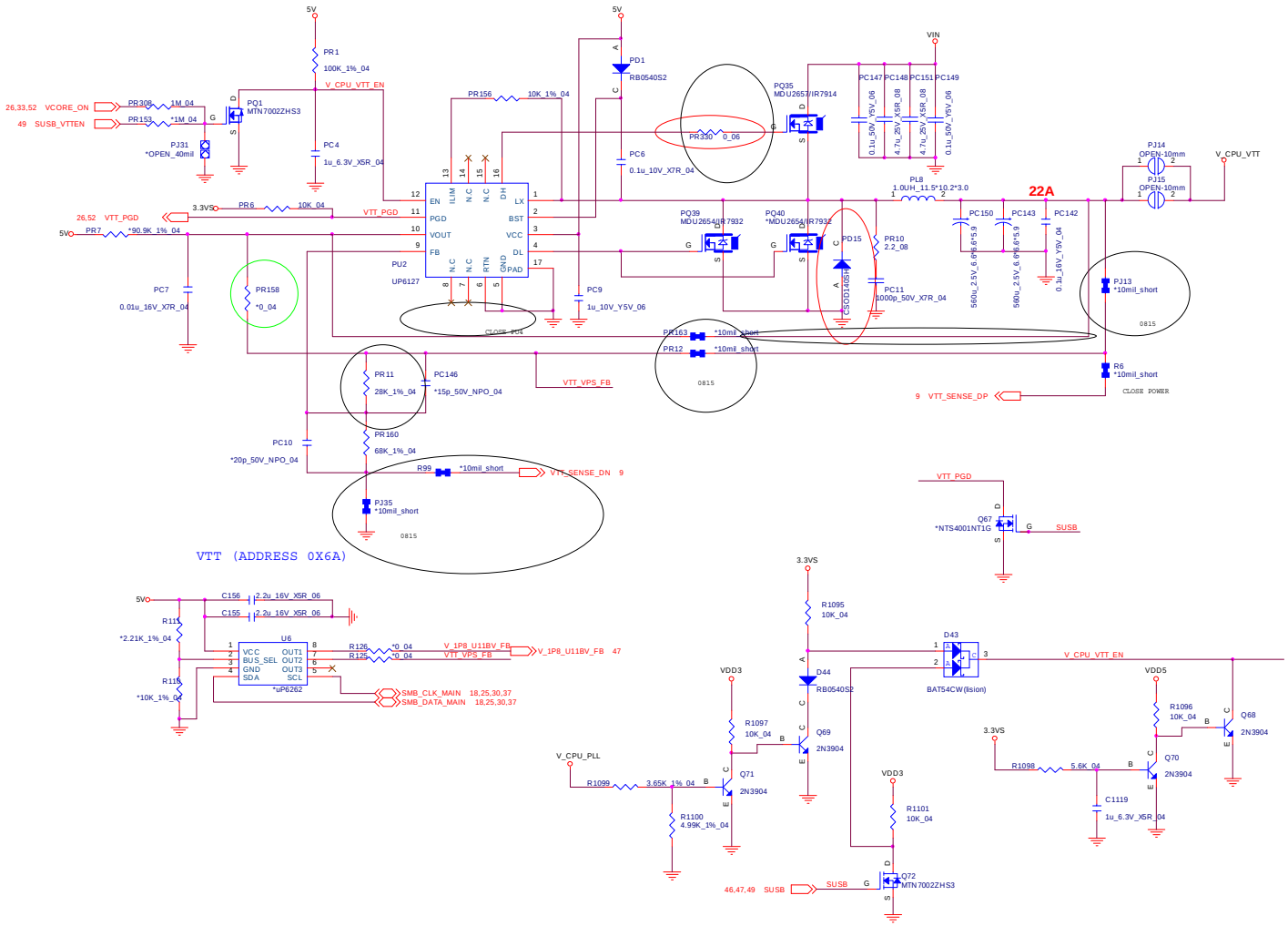

CPU1 ISL6366CR Controller

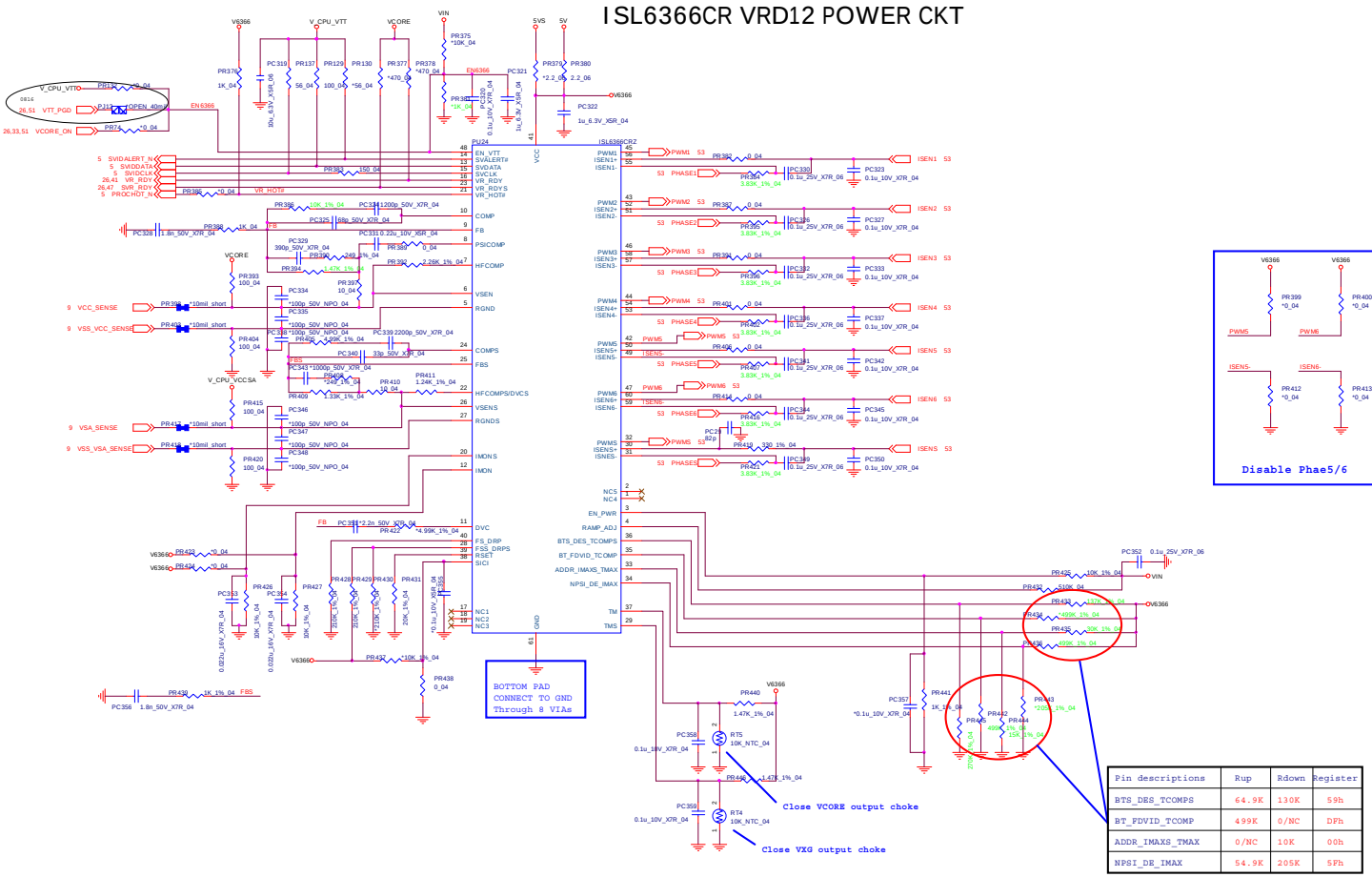

Pin descriptions	Rup	Rdown	Register
BTS_DES_TCOMPS	64.9K	130K	59h
BT_FDVID_TCOMP	499K	0/NC	DFh
ADDR_IMAXS_TMAX	0/NC	10K	00h
NPSI_DE_IMAX	54.9K	205K	5Fh

Sheet 52 of 63
CPU1 ISL6366CR Controller

CPU2 Power Stage

Sheet 53 of 63
CPU2 Power Stage

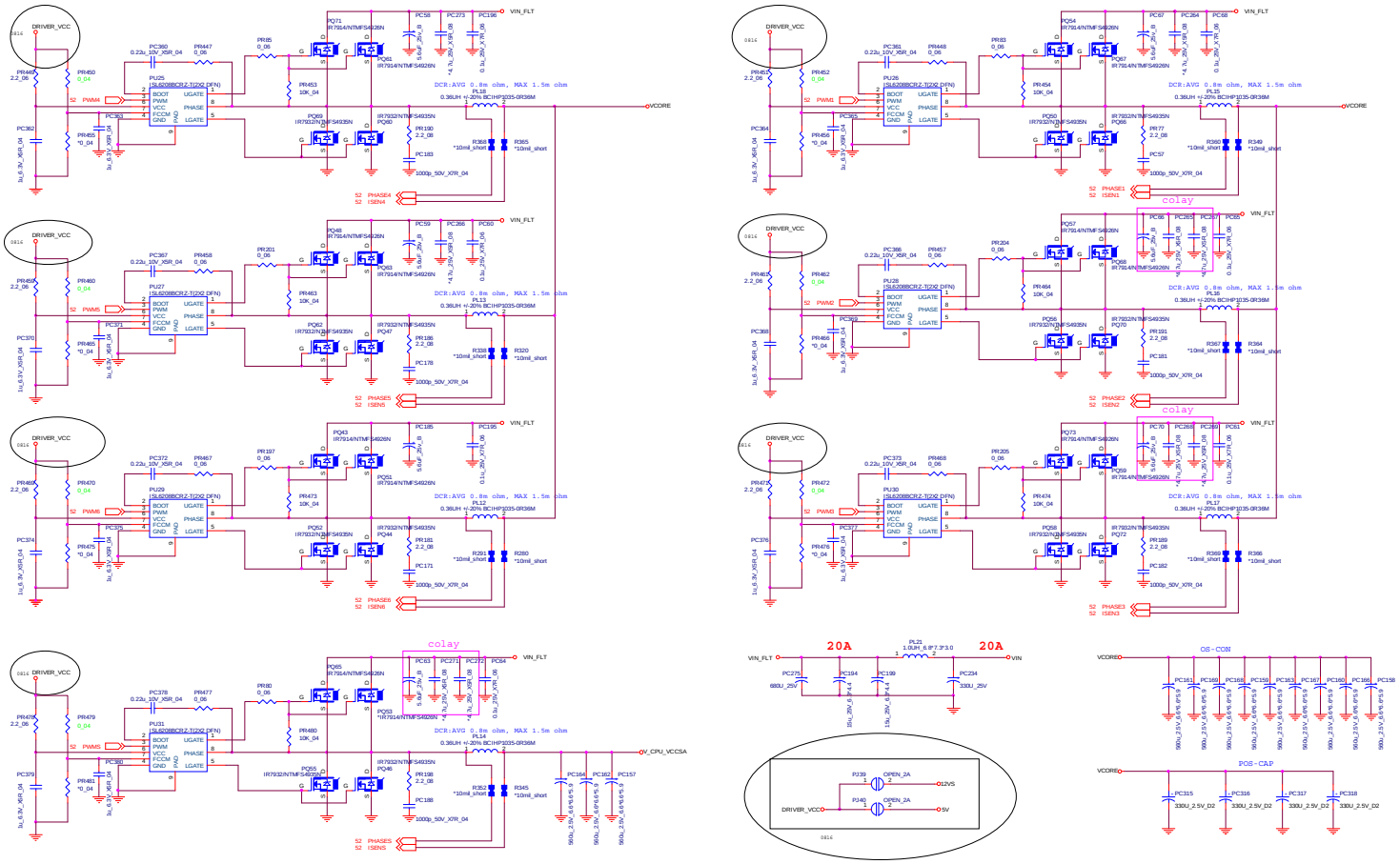

DAUGHTER CON

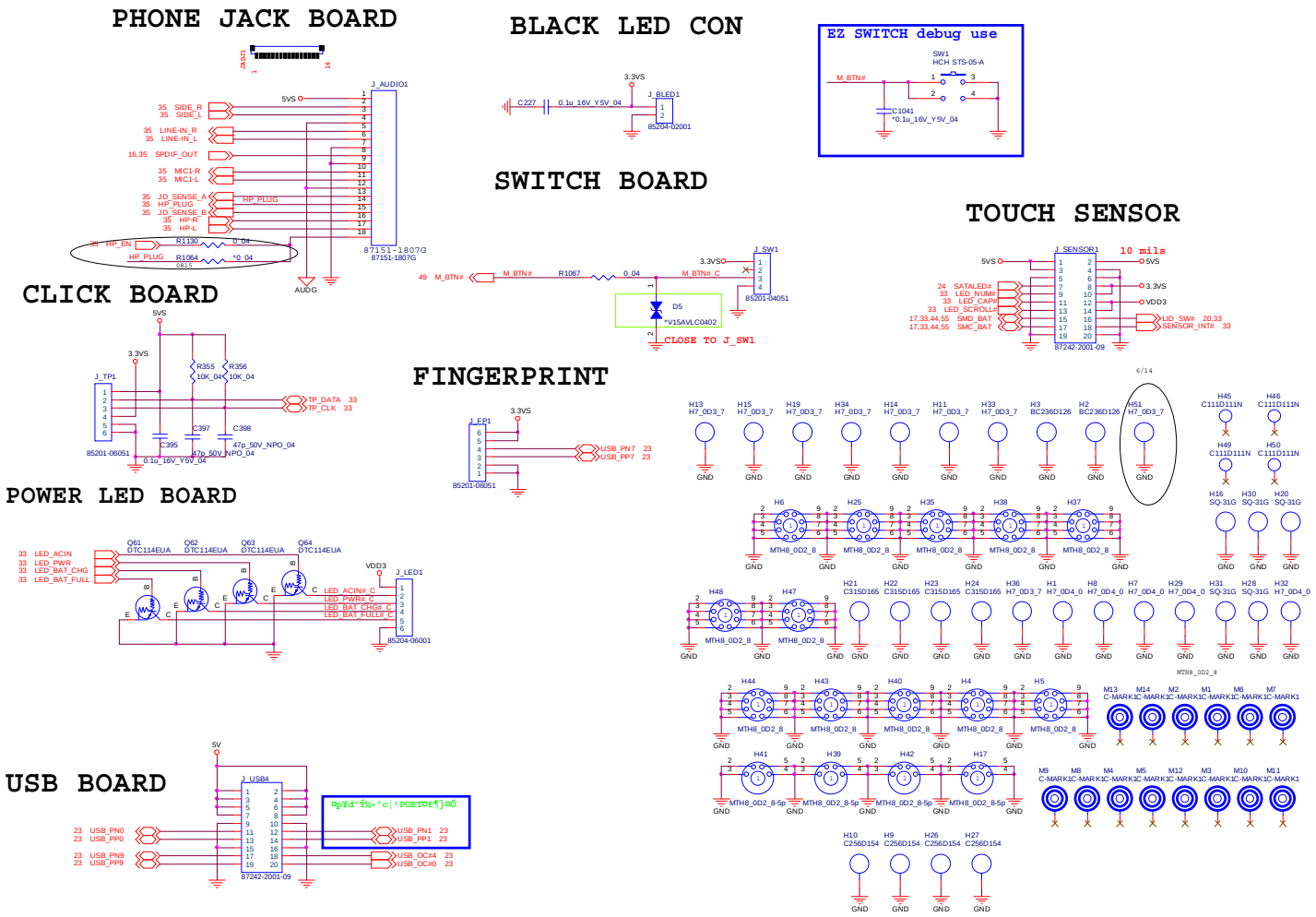

Sheet 54 of 63
DAUGHTER CON

Backlight Keyboard

Sheet 55 of 63
Backlight Keyboard

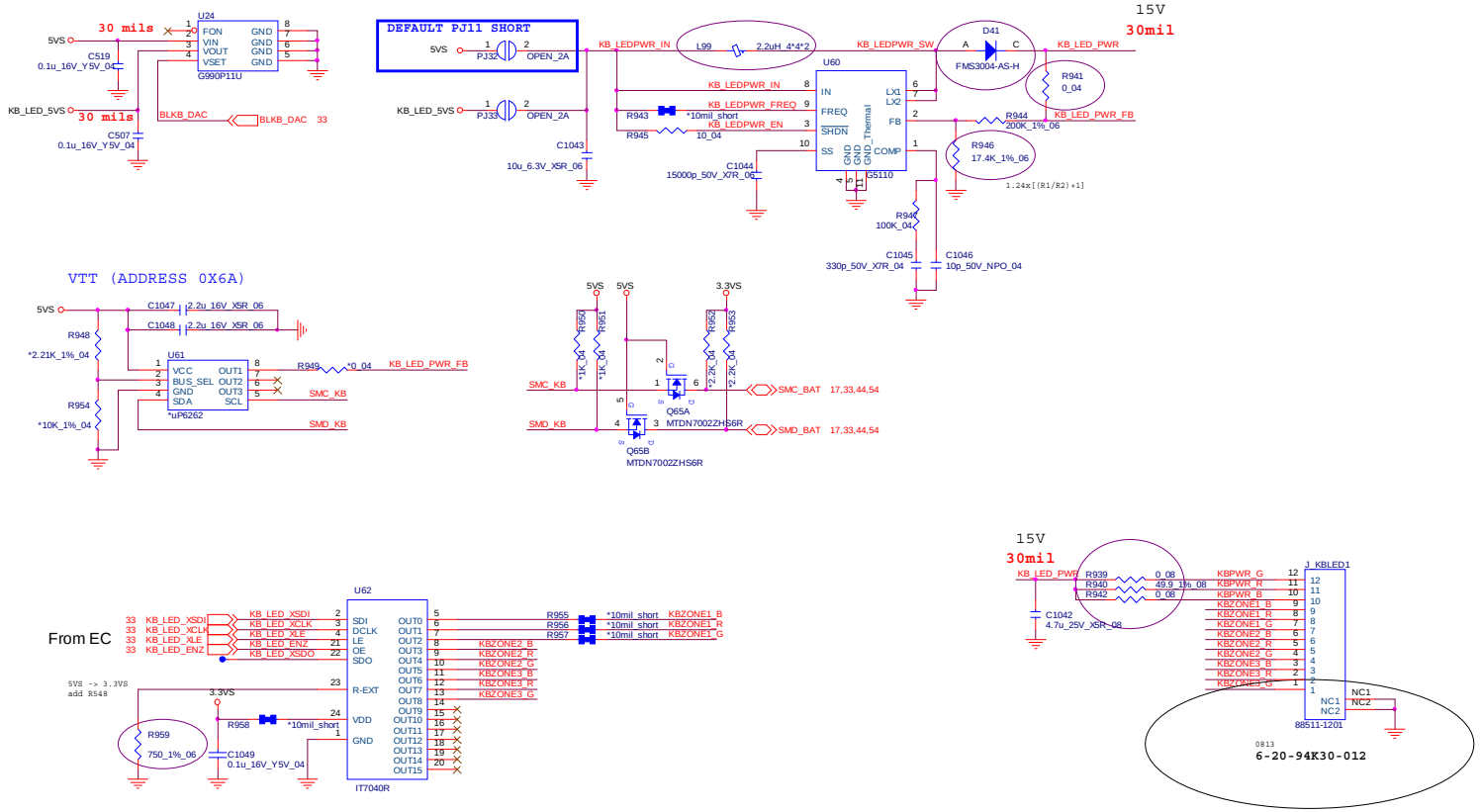

AUDIO BOARD

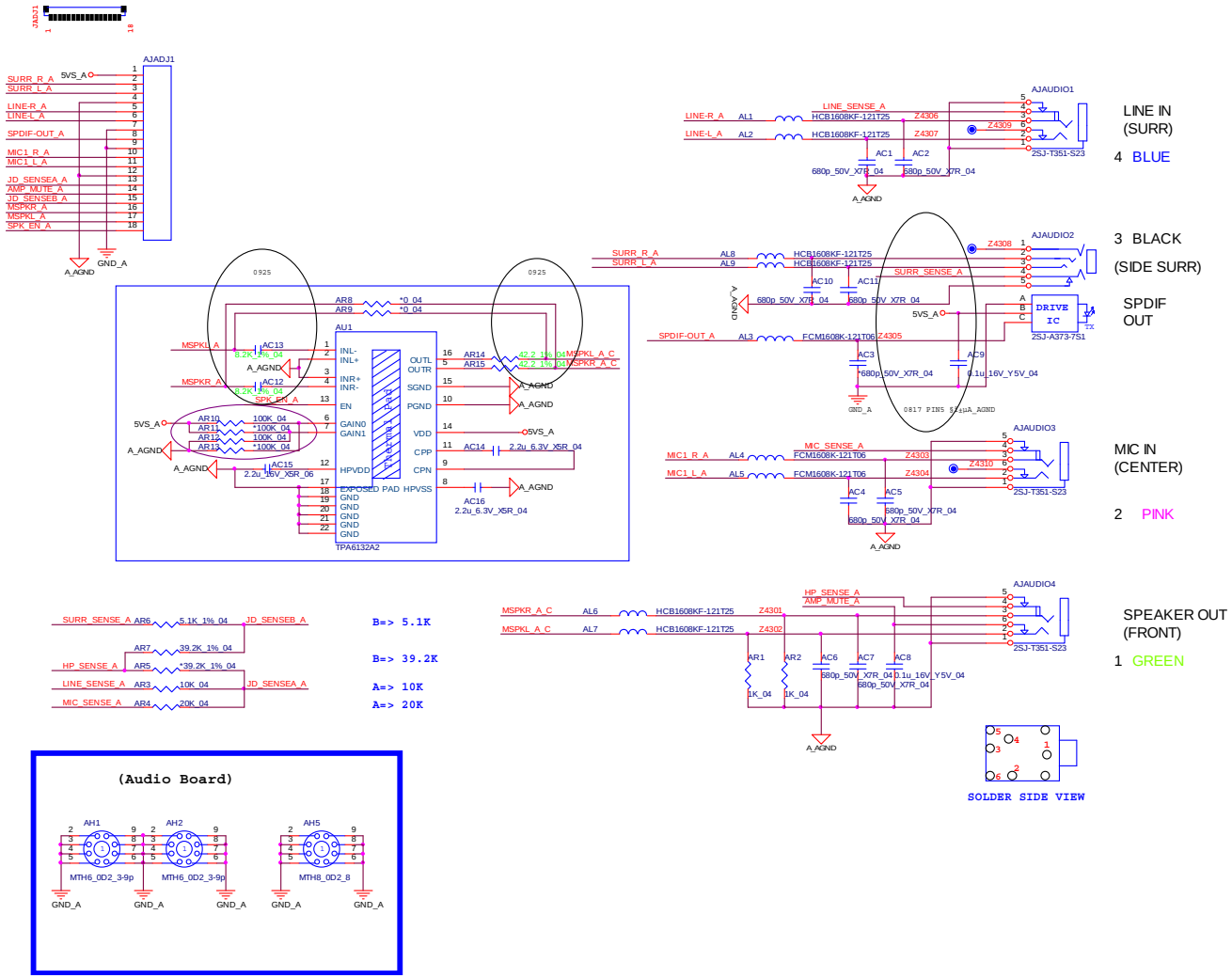

Sheet 56 of 63
AUDIO BOARD

CLICK BOARD

Sheet 57 of 63
CLICK BOARD

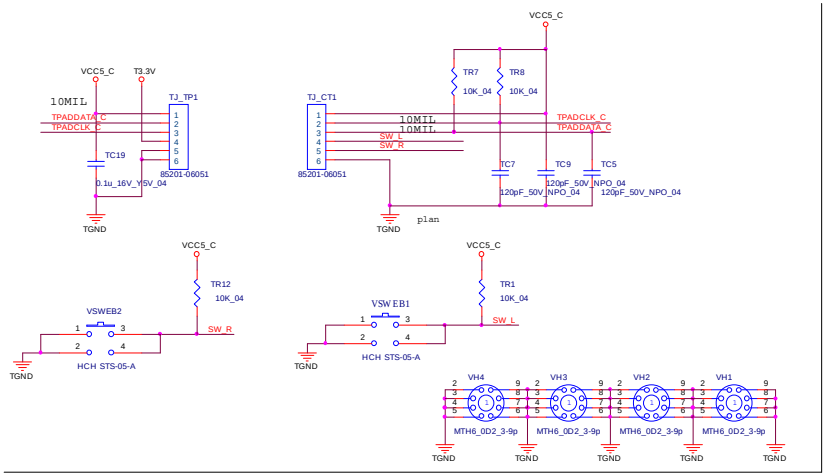

FINGER BOARD

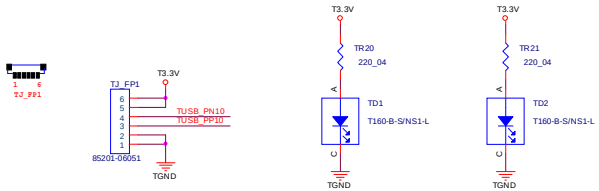

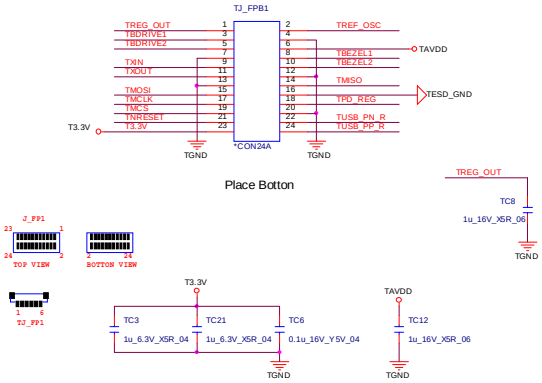

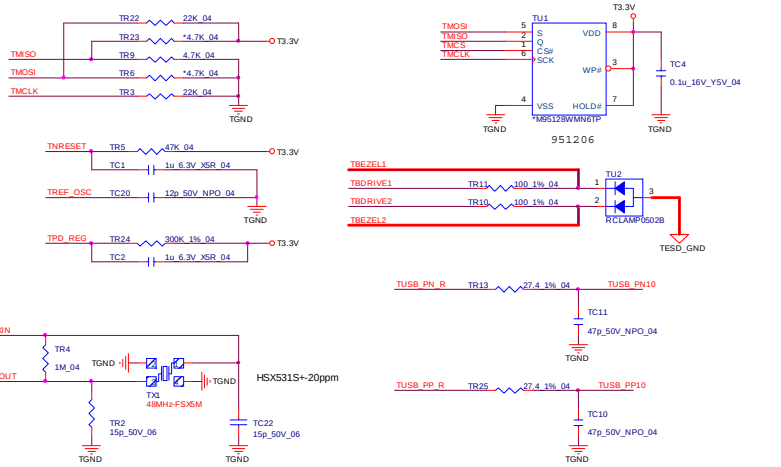

K/B CONVERTER BOARD

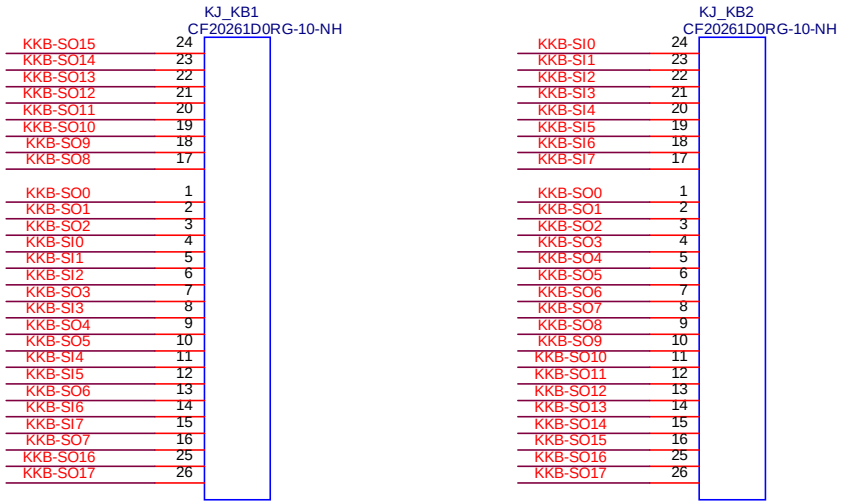

Sheet 58 of 63
K/B CONVERTER BOARD

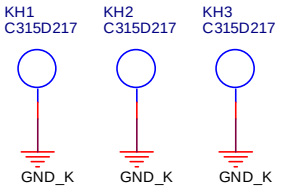

SWITCH BOARD

Sheet 59 of 63
SWITCH BOARD

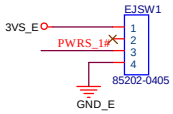

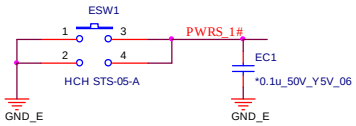

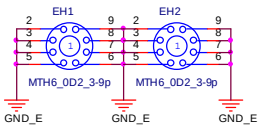

USB BOARD

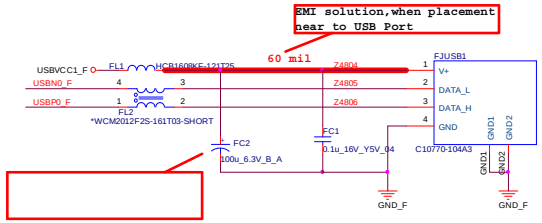

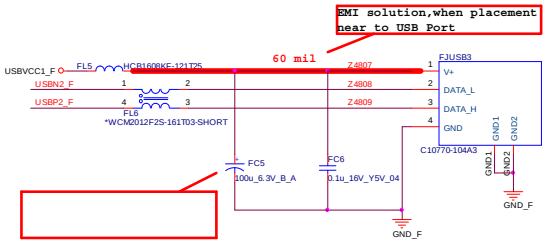

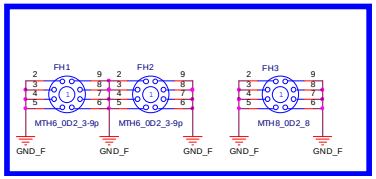

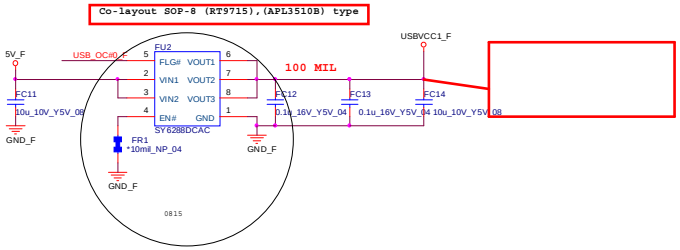

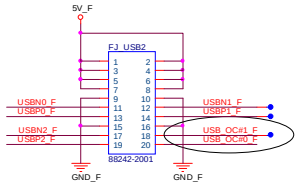

Sheet 60 of 63
USB BOARD

FINGER SENSOR BOARD

Sheet 61 of 63
FINGER SENSOR BOARD

The TESD_GND trace has to be wide (> 20mil)
The path be marked in RED
needs to be design to be short and at low impedance.

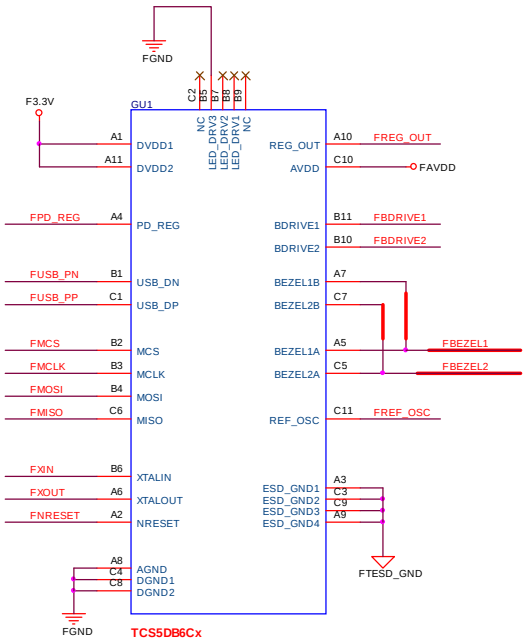

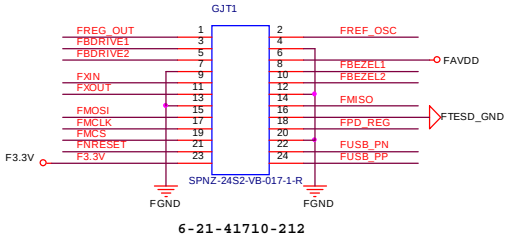

TOUCH SENSOR BOARD

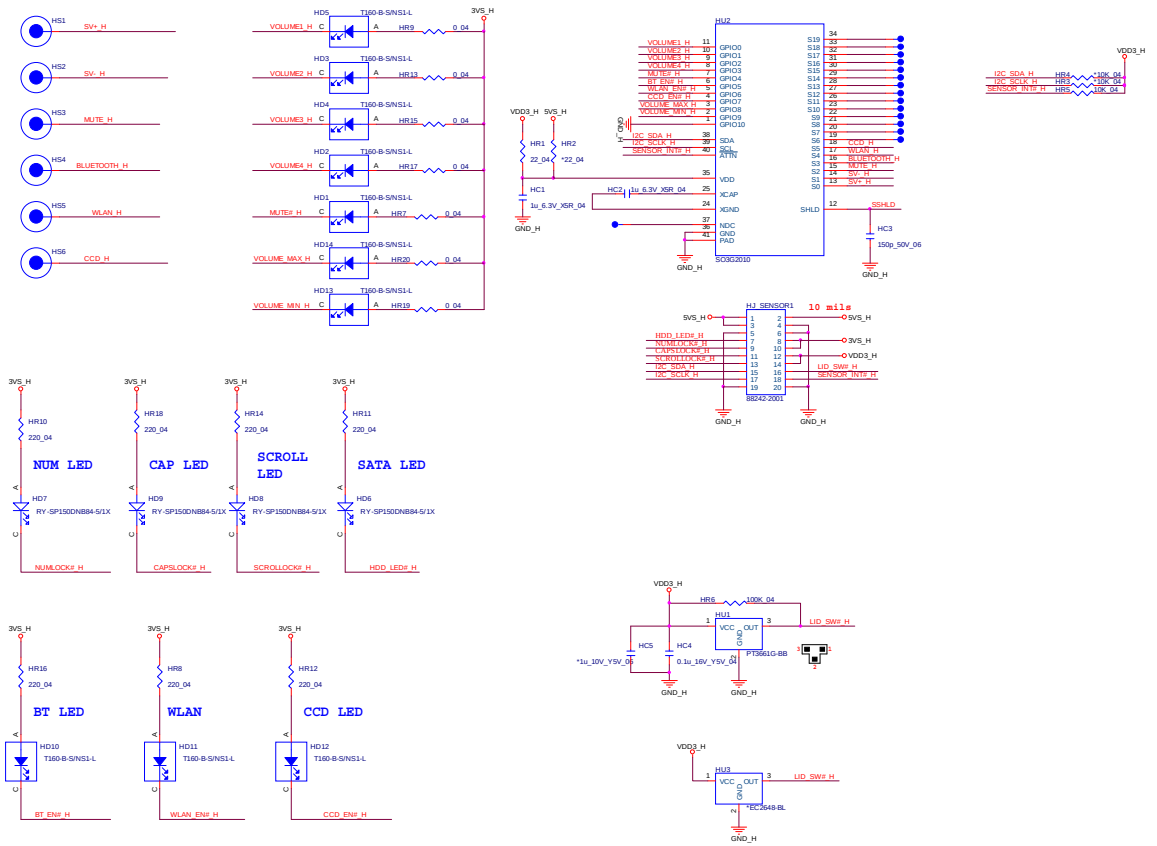

Sheet 62 of 63
TOUCH SENSOR BOARD

POWER LED BOARD

Sheet 63 of 63
POWER LED BOARD

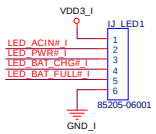

AC IN/POWER ON LED

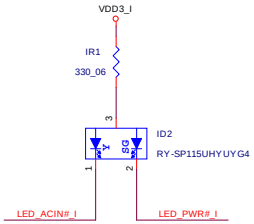

BAT CHARGE/FULL LED

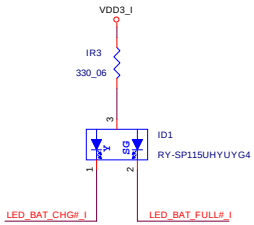

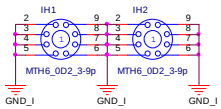

Appendix C:Updating the FLASH ROM BIOS

To update the FLASH ROM BIOS, you must:

- Download the BIOS update from the web site.
- Unzip the files onto a bootable CD/DVD/USB Flash Drive.
- Reboot your computer from an external CD/DVD/USB Flash Drive.
- Use the flash tools to update the flash BIOS using the commands indicated below.
- Restart the computer booting from the HDD and press **F2** at startup enter the BIOS.
- Load setup defaults from the BIOS and save the default settings and exit the BIOS to restart the computer.
- After rebooting the computer you may restart the computer again and make any required changes to the default BIOS settings.

Download the BIOS

1. Go to **www.clevo.com.tw** and point to **E-Services** and click **E-Channel**.
2. Use your user ID and password to access the appropriate download area (BIOS), and download the latest BIOS files (the BIOS file will be contained in a batch file that may be run directly once unzipped) for your computer model (**see sidebar for important information on BIOS versions**).

Unzip the downloaded files to a bootable CD/DVD or USB Flash drive

1. Insert a bootable CD/DVD/USB flash drive into the CD/DVD drive/USB port of the computer containing the downloaded files.
2. Use a tool such as Winzip or Winrar to unzip all the BIOS files and refresh tools to your bootable CD/DVD/USB flash drive (you may need to create a bootable CD/DVD with the files using a 3rd party software).

Set the computer to boot from the external drive

1. With the bootable CD/DVD/USB flash drive containing the BIOS files in your CD/DVD drive/USB port, restart the computer and press **F2** (in most cases) to enter the BIOS.
2. Use the arrow keys to highlight the **Boot** menu.
3. Use the "+" and "-" keys to move boot devices up and down the priority order.
4. Make sure that the CD/DVD drive/USB flash drive is set first in the boot priority of the BIOS.
5. Press **F4** to save any changes you have made and exit the BIOS to restart the computer.

BIOS Version

Make sure you download the latest correct version of the BIOS appropriate for the computer model you are working on.

You should only download BIOS versions that are V1.01.XX or higher as appropriate for your computer model.

Note that BIOS versions are not backward compatible and therefore **you may not downgrade your BIOS to an older version** after upgrading to a later version (e.g if you upgrade a BIOS to ver 1.01.05, you **MAY NOT** then go back and flash the BIOS to ver 1.01.04).

Use the flash tools to update the BIOS

1. Make sure you are not loading any memory management programs such as HIMEM by holding the **F8** key as you see the message "**Starting MS-DOS**". You will then be prompted to give "**Y**" or "**N**" responses to the programs being loaded by DOS. Choose "N" for any memory management programs.
2. You should now be at the DOS prompt e.g: DISK **C**:\> (C is the designated drive letter for the CD/DVD drive/USB flash drive).
3. **Type the following command** at the DOS prompt:

   C:\> Flash.bat

4. The utility will then proceed to flash the BIOS.
5. You should then be prompted to press any key to restart the system or turn the power off, and then on again but make sure you remove the CD/DVD/USB flash drive from the CD/DVD drive/USB port before the computer restarts.

Restart the computer (booting from the HDD)

1. With the CD/DVD/USB flash drive removed from the CD/DVD drive/USB port the computer should restart from the HDD.
2. Press **F2** as the computer restarts to enter the BIOS.
3. Use the arrow keys to highlight the **Exit** menu.
4. Select **Load Setup Defaults** (or press **F3**) and select "**Yes**" to confirm the selection.
5. Press **F4** to save any changes you have made and exit the BIOS to restart the computer.

Your computer is now running normally with the updated BIOS

You may now enter the BIOS and make any changes you require to the default settings.